VOL. 16 NOTES FROM THE SHOP NO. 92

Woodsmith®

PERFECT MITERS

Some great tips and jigs for making tight-fitting frames

STAND-UP DESK OAK STEP STOOL UNIQUE FRAMES

No. 92 April, 1994

Woodsmith®

Editor Donald B. Peschke
Managing Editor Douglas L. Hicks
Assistant Editors James M. Dolan, Philip A. Totten, Jonathan Garbison, Mark A. Williams

Creative Director Ted Kralicek
Art Director Rod Stoakes
Senior Illustrators David Kreyling, Cinda Shambaugh
Illustrators Dirk Ver Steeg, Mark Higdon
Photographer Crayola England
Electronic Graphics Chris Glowacki
Design Director Ken Munkel
Senior Designers Jan Hale Svec, Kent Welsh
Shop Manager Steve Curtis
Shop Asst./Facilities Steve Johnson

Circulation Director Liz Bredeson
Subscription Manager Sandy Baum
Circ. Planning Coord. Rod Cain
Newsstand Sales Kent A. Buckton

PUBLISHING SERVICES

Manager: Gordon Gaippe • *Sr. Graphic Artist:* Robert H. Whitmer • *Graphic Artist:* Cheryl L. Cynor

CORPORATE SERVICES

Controller: Robin Hutchinson • *Account.:* Laura Thomas • *Bookkeep.:* Julie Greenlee • *Prod. Mgr:* Carol Quijano • *Info. Serv. Mgr.:* Joyce Moore • *Elect. Pub. Coord.:* Douglas M. Lidster • *Applic. Specialist:* Linda Morrow • *Admin. Assists.:* Cheryl A. Scott, Julia Fish • *Recept.:* Jeanne Johnson • *Build. Maint.:* Ken Griffith

WOODSMITH MAIL ORDER

Marketing Dir.: Robert Murry • *Art Dir.:* Cindy Jackson • *Fulfillment Mgr.:* Valerie Wiese • *Catalog Prod. Mgr.:* Bob Baker • *Proj. Supplies:* Linda Jones • *Tech. Support:* Jeff Janes • *Recept.:* Cynthia Kerman

CUSTOMER SERVICE

Supr.: Jennie Enos • *Cust. Serv. Reps.:* Jennifer Murphy, Joy Johnson, Sara Kono, Anna Cox, Stephanie Hagen, Kristi Andrews, Tammy Aldini

SHIPPING DEPARTMENT

Supr.: Jerry Carson • *Fulfillment :* Gloria Sheehan, Donnie McVey, Chuck Carlson, Sylvia Carey

WOODSMITH STORE

Manager: Dave Larson • *Assistant Manager:* Paul Schneider • *Sales Staff:* Wendell Stone, Dominic Bazzocco • *Office Manager:* Vicki Edwards

Woodsmith® (ISSN 0164-4114) is published bimonthly (Feb., Apr., June, Aug., Oct., Dec.) by Woodsmith Corp., 2200 Grand, Des Moines, IA 50312.
Woodsmith® is a registered trademark of Woodsmith Corp. Copyright© 1994 Woodsmith Corporation. All rights reserved.
Subscriptions: Single copy: $3.95. One year subscription (6 issues), $19.95. Two years (12 issues), $35.95. (Canada/Foreign add $5 per year, U.S. funds.)
Second Class Postage Paid at Des Moines, IA and at additional offices.
Postmaster: Send change of address to *Woodsmith*, Box 10718, Des Moines, IA 50350.
Subscription Questions? Call **1-800-333-5075**, 8:00 AM to 5:00 PM, Central Time, weekdays.

EDITOR'S COLUMN

Sawdust

Whenever I visit someone else's shop, the first things I usually notice are the jigs and fixtures that may be around. Lots of times they're on a machine, or under it — half-covered with sawdust.

Quite often they're hung all around the walls on nails like trophies.

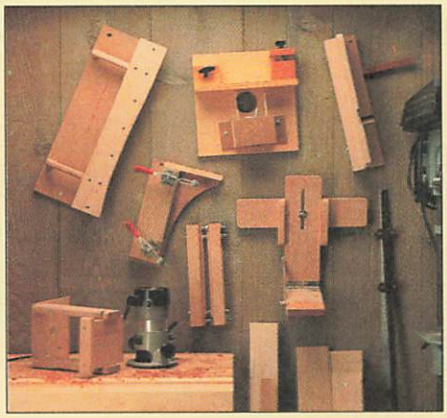

It's always a challenge trying to figure out what these jigs and fixtures were used for. Some are obvious. A cut-off table next to the table saw. A dovetail fixture. Or a beam compass.

But a lot of them are more mysterious. And whenever I ask what one's for, I usually get an interesting story about a project that was built a number of years ago. The story often includes some tricky cut that could only be made if the workpiece was held in a certain position.

A NEW JIG

Okay, so why all the talk about jigs? I got to thinking about this shortly after I built a jig from some photos sent in by Harry DeFuria, one of our readers. The jig is used to support a turning (lathe) gouge when sharpening it, see page 30. The problem I've always had with sharpening the bevel on a gouge is getting it consistently smooth and at the correct angle — both at the same time.

Harry's jig is simple to build and holds the gouge in a way that makes this easy. The first time I used it, Steve, our shop manager, was watching. When I turned over the gouge to check the bevel, he was so impressed he said, "That's one jig we're hanging *right above the grinder*."

It seems that Steve has this pecking order for jigs. The ones we use the most stay right by the machines. (I think the miter gauge set-up jig shown on page 23 probably will also fall into this category.)

And those we don't use as much are put in the storage closet. The oval cutting jig I used for cutting a mirror frame about a year ago fits in this category. It was one of the most interesting jigs I've ever built. But we're not likely to use it every day (or year). So it's sitting in the closet gathering dust and waiting for the next oval project.

We may never use that oval cutting jig again, but there's some security knowing it's back there. Just in case.

A WALNUT STORY

There's also an interesting story behind the walnut I used in the Stand-up Desk shown on page 6. It all came from one huge tree that was in the front yard of a woman's house in Eastern Iowa.

She wanted to sell the tree and called a couple veneer companies to come and bid on it. Removing the tree would have meant disconnecting power lines and some tricky work to keep it from falling on the house. None of the companies were interested.

Then she dropped the price and called a local sawmill. The mill owner felled the tree and cut it up with his portable sawmill.

Just about the time the wood was pulled out of the kiln, we came along looking for some walnut for the Desk. The pieces were perfect — 16 to 18" wide and no sapwood. The boards were even stacked in order, just as they came out of the tree.

Most of it was about 1" thick, but there were also some 2"-thick blanks. Just what I needed to make some legs for the Desk.

Sometimes, things work out right.

A NEW FACE

Mark Williams has joined us as an assistant editor. He has a varied background, but most recently he was a technical writer for the aerospace industry. Impressive.

But to me, the important thing is that he's a long-time woodworker. Now he's looking forward to the opportunity to write about his experiences for *Woodsmith* and *ShopNotes*. Welcome aboard, Mark.

Don

Contents

FEATURES

Stand-Up Desk 6

This is more than a desk on tall legs. In order for the project to fit well into today's homes, we improved on a century-old design when we built this walnut classic.

Dovetail Mortise & Tenon 14

Strength ... in many directions. That's the benefit of using a tenon shaped like a dovetail. The best thing about the joint is the mating parts are cut on a router table, with just one bit.

Picture Frames 17

These frames start out as one piece of wood glued up from multiple parts. So there's fine detail without a lot of small pieces. It also makes them easier — and safer — to build.

Miter Tips 22

A simple miter isn't simple. It demands accurate setups. Here are some tips we find helpful. Plus, a jig for quickly setting your miter gauge to cut at exactly 45°.

Oak Step Stool 24

While building this stool we took a different approach to making the stair-stepped sides. But it's not the approach you might expect — it actually wastes very little wood.

Gouge Grinding Jig 30

This jig, submitted by subscriber Harry DeFuria, allows you to quickly and accurately sharpen any lathe gouge.

DEPARTMENTS

Tips & Techniques 4

Shop Notes 16

Talking Shop 28

Sources 31

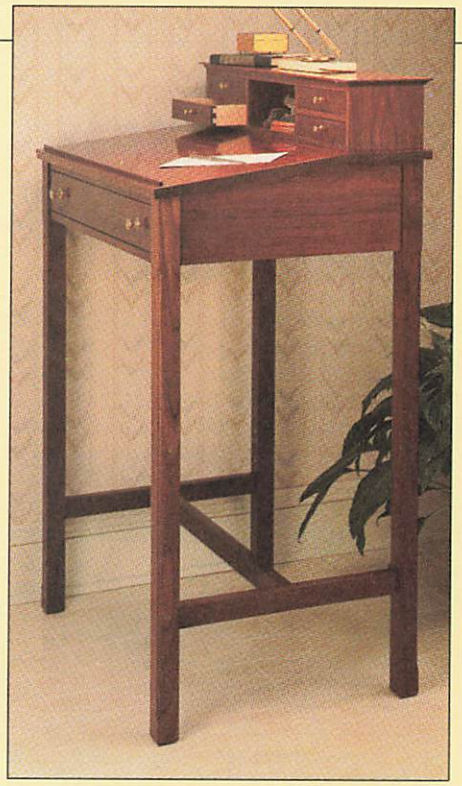

Stand-Up Desk *page 6*

Picture Frames *page 17*

Oak Step Stool *page 24*

Tips & Techniques

OUTFEED TABLE

■ On my table saw, there isn't a lot of distance between the blade and the far side of the table. This has caused two problems when cutting larger pieces.

First, long boards have a tendency to fall off the back of the saw before the cut is complete. And second, a small piece can fall off and jam the motor.

To avoid this, I made a ¾"-thick plywood outfeed table that bolts to the back of my saw, see Fig. 1. The table provides extra support for boards and shields the motor from falling scrap.

The outfeed table is mounted to the saw with bolts and L-brackets. When positioning the brackets, allow for the rip fence guide bar and the motor housing (with the blade tilted to 45°).

To align the outfeed table with the table top, I ripped two spacer blocks to width. These fill in the space between the plywood table and the L-brackets.

Then, before screwing the plywood in place, cut two grooves for the miter gauge, see Fig. 2. Note: When cutting the grooves, it's not important that they fit the miter gauge perfectly. All that really matters is that the grooves are wide enough and deep enough to receive the miter gauge bar as it's pushed beyond the table top.

William Allen
Brunswick, Georgia

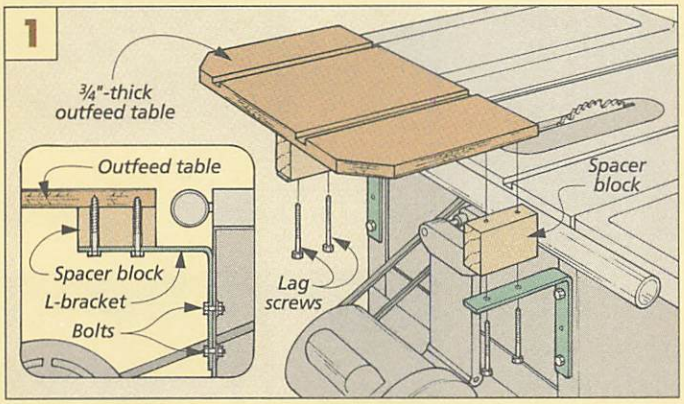

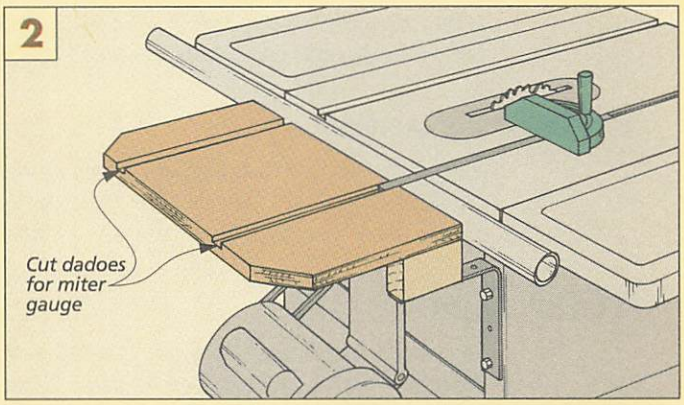

PLYWOOD "SKATEBOARD"

■ It can be difficult moving a full sheet of plywood alone. To avoid dragging a sheet across the shop, I made an inexpensive plywood "skateboard," see Fig. 2.

My skateboard is made from a piece of 2x4, two 6" utility wheels, and a length of threaded rod, see Fig. 1. A groove in the 2x4 keeps the plywood in place.

To prevent the skateboard from rolling around as the plywood is loaded, I positioned the axle slightly off-center.

Ed Lien
Victoria, British Columbia

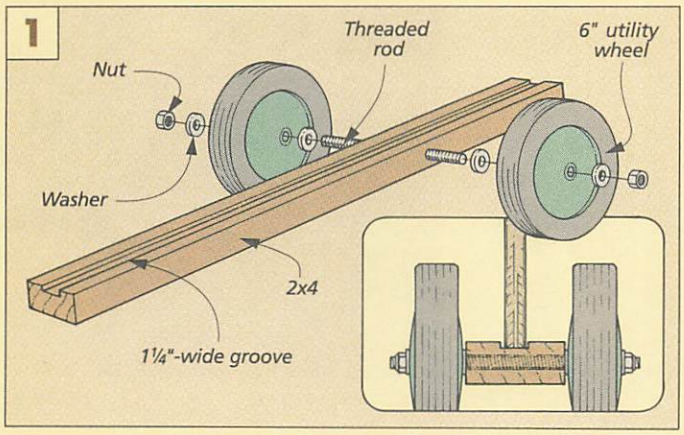

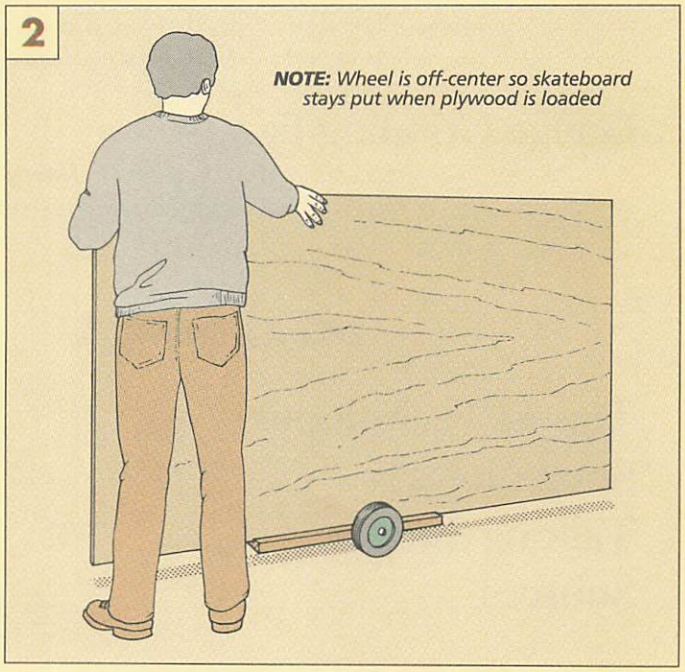

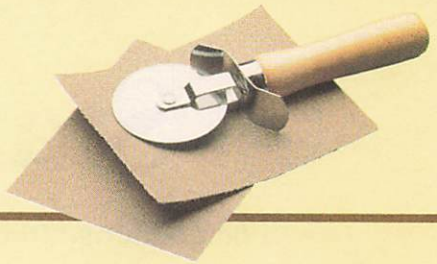

SANDPAPER CUTTER

■ A pizza cutter can do more than cut pizza. It can also be used to cut sandpaper. I made a jig that works with an ordinary pizza cutter to cut sheets of sandpaper into smaller pieces for each of my power sanders.

Just place a sheet of sandpaper in the jig. Then roll the cutter across the sandpaper. A narrow kerf guides the cutter in a straight line, eliminating the ragged edges that tearing or ripping can cause.

Don Davis
Port Orchard, Washington

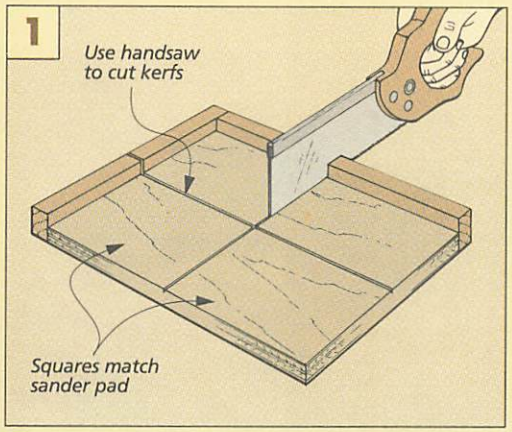

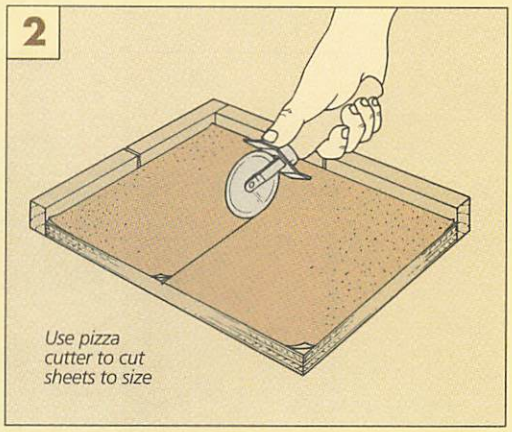

CENTER FINDER

■ In *Woodsmith* No. 90, you recommended using a compass for finding the center of a dowel. I have a method that's easier and more accurate. I made a shop-built jig that works with the common dowels I use in my shop, see drawing.

The jig is very simple to use. Just push the dowel in the correct hole and give it a slight twist. A screw in the center of the hole leaves an impression on the end of the dowel — indicating the exact center.

To begin, first cut a 1½"-thick block of wood to size allowing for the different dowels you want to mark. (I used a short length of 2x4 for this.)

Now, using spade bits or Forstner bits that correspond with your dowels, drill a ⅝"-deep hole for each dowel.

Here's the trick for making sure the screws are centered in the dowel holes. Use the center-points left behind by the spade or Forstner bits to locate the shank holes for the screws.

Terry Foster
Rockford, Illinois

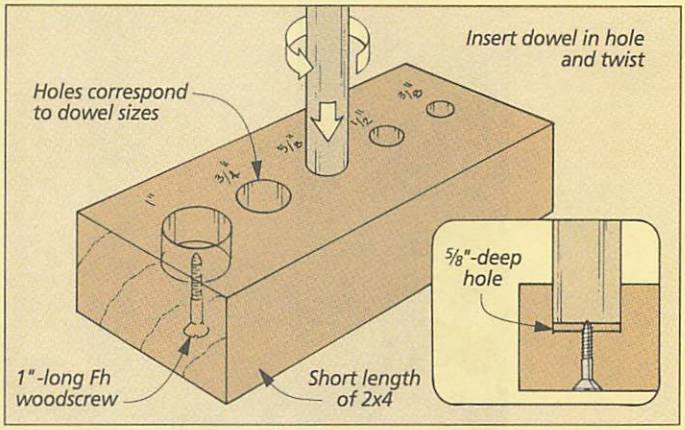

CUT-MARK ALIGNMENT

■ It can be difficult aligning a pencil mark to a saw blade. So to increase the accuracy, I made a scratch on the top of my table saw that corresponds to the edge of the blade, see Fig. 1.

Now, I just position the pencil mark drawn on the workpiece over the scratch before making the cut, see Fig. 2. (Since I use two blades with different tooth sets, I made two scratches.)

Kerry Hogan
Belgrade, Montana

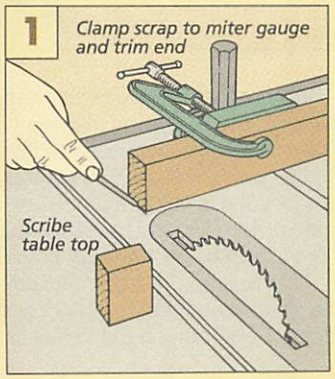

SUBMIT YOUR TIPS

If you would like to share an *original* shop-tested tip, send it to *Woodsmith*, Tips and Techniques, 2200 Grand Avenue, Des Moines, Iowa 50312. Or if it's easier for you, FAX it to us at: 515–282–6741.

If we publish it, we will send you $30 to $100, depending on the published length. Include a brief explanation and sketch (or photo). And don't worry, we'll rewrite the tip and redraw the art if necessary. Also, *please* include a daytime phone number.

Stand-Up Desk

The challenge in designing this traditional Desk was coming up with a size that would fit comfortably into a typical home.

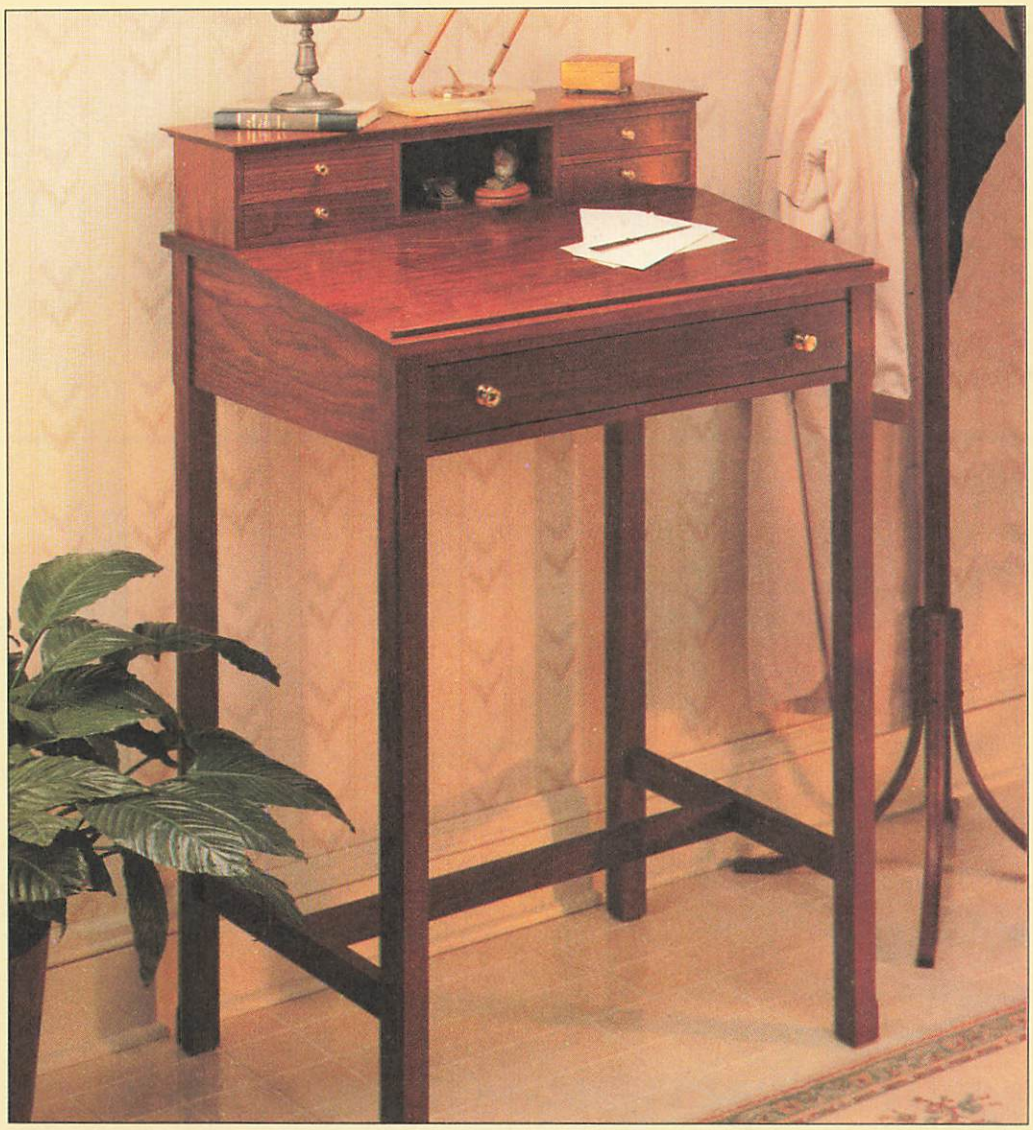

There's a short story behind the design of this Desk. On paper, it started out similar in size to one you might see in a museum of Early American furniture. The design details looked good too — strong joinery and interesting angles.

After dry assembling most of the parts for the desk, I stood back to take a look. Other people wandered by to add their two cents' worth. A lot of hmmms and chin scratching. Then something unusual happened — everyone agreed.

It's not that there was anything wrong with the design, the scale was just too *big* to fit comfortably in most homes. Desks like this were originally made to be used in a bookkeeper's office or a reception area at an inn. (It brings to mind a vision of Bob Cratchit working hard on Christmas Eve in Scrooge's counting house.)

Fortunately, I had only dry assembled the Desk so it could come apart and be cut down in size. (Good thing it didn't start out too small.)

EXPLODED VIEW

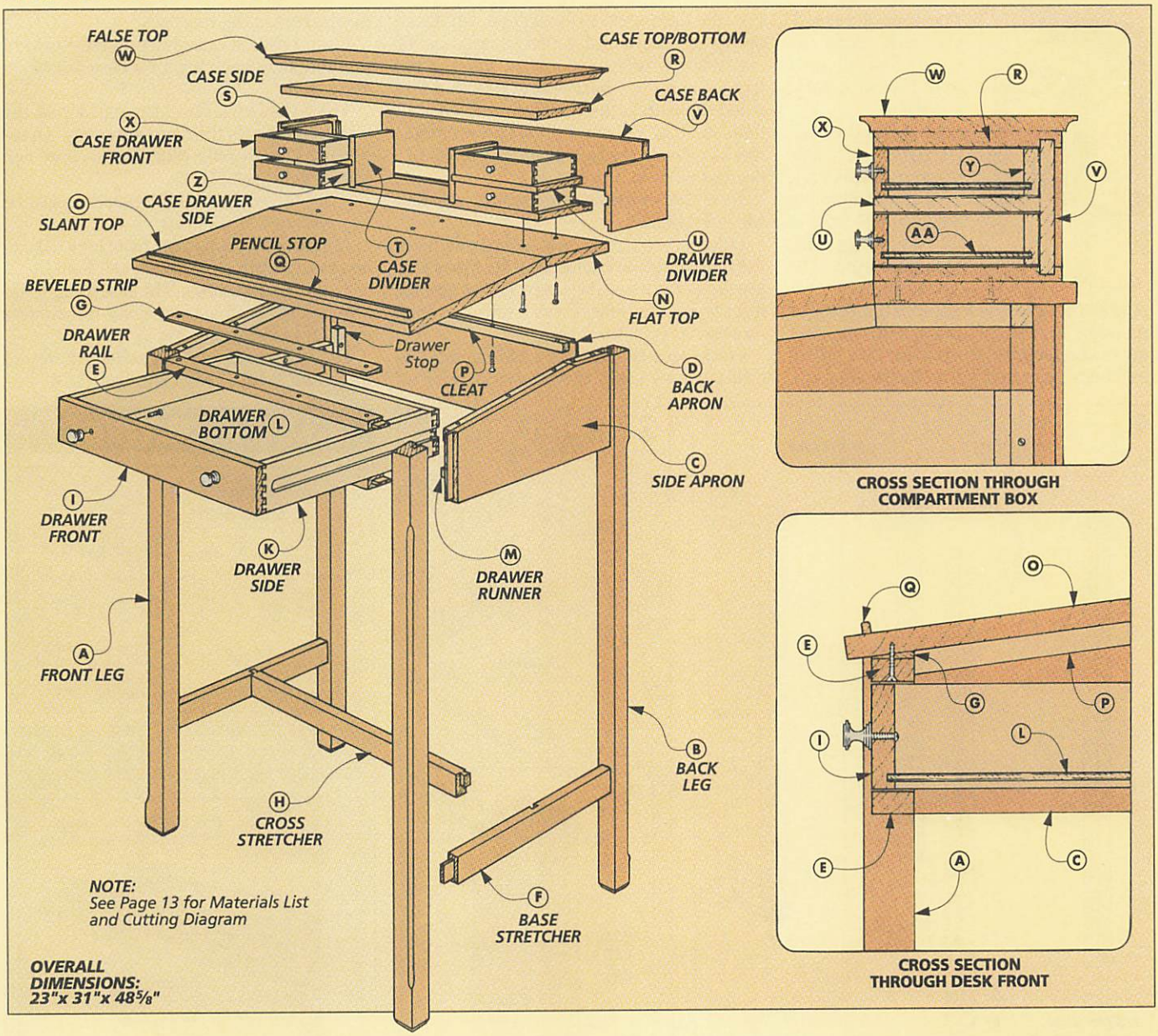

HOW WE FINISHED THE DESK

A writing desk should have a hard, smooth surface. To achieve this, we used varnish.

Note: For a *perfectly* smooth surface, fill the pores of the wood with paste wood filler before applying the varnish.

CLEAN AREA. After sanding to 180-grit, I moved the desk to a clean area for finishing. Why? Since varnish dries so slowly, a lot of dust can settle on the surface as it's drying. If your finishing area is clean, there will be less dust floating in the air to settle on the desk. The less dust, the smoother the finish.

VARNISHES. I used two types of varnish. Two coats of a high gloss to create a hard surface, and one coat of eggshell to lower the gloss. (For more on this, see page 31.)

I let each coat cure overnight. (Longer is better.) Between coats, I sanded with 400-grit wet-or-dry sandpaper.

After each sanding, take extra care to remove the dust. I used a clean rag followed by two tack cloths — one for the initial wipe down, another for a final dusting.

RUB OUT FINISH. After the final coat was dry, I "rubbed out" the finish. I started with 600-grit sandpaper and then moved to 0000 steel wool. (Wipe the surface clean and use fresh sandpaper often.)

THE LEGS

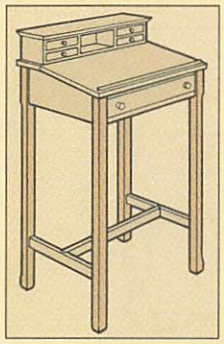

The legs of a stand-up desk must be sturdy. So I cut them from 1¾"-thick stock, see Fig. 1.

First, rip the **legs (A, B)** to match their thickness, see Fig. 1.

Then, cut all four to the finished length of the back legs (B). (The front legs will be cut to length later.)

ORIENTATION. The legs are connected at the top by a series of aprons and rails. And they're connected at the bottom by a pair of stretchers, refer to Fig. 5 on the facing page. For the strongest connections, all these pieces are joined with mortises and tenons.

LAY OUT MORTISES. To keep track of the legs — and the mortise locations — I first stood them up in their final assembled position, see Fig. 1. Then I drew two reference marks on each leg to indicate the limits of a decorative cove, see Fig. 1.

Now the mortises can be cut, see Leg Mortises below.

LONG MORTISES. I used an end mill bit in the router table to cut the long mortises near the top of the legs. These are for the aprons, refer to Fig. 5. Note: There's only one long mortise on each front leg.

SHORT MORTISES. Then I switched to the drill press — using the same router bit — for the remaining mortises.

First, I drilled one short mortise toward the bottom of each leg for a base stretcher, see Fig. 5.

The last mortises to cut are cut across the inside corners of the front legs *only*. These mortises are a little different — they run horizontally, see Fig. 2a.

Then the ends of all the mortises can be squared up with a chisel.

After that, the top of the front legs (A) can be cut to length at an angle, see Fig. 2.

COVES & CHAMFERS. The last thing to do is rout a decorative cove along the *outside* edge of each leg, see Fig. 3.

Finally, I routed a ¼"-wide chamfer around the bottom end of each leg, see Fig. 4.

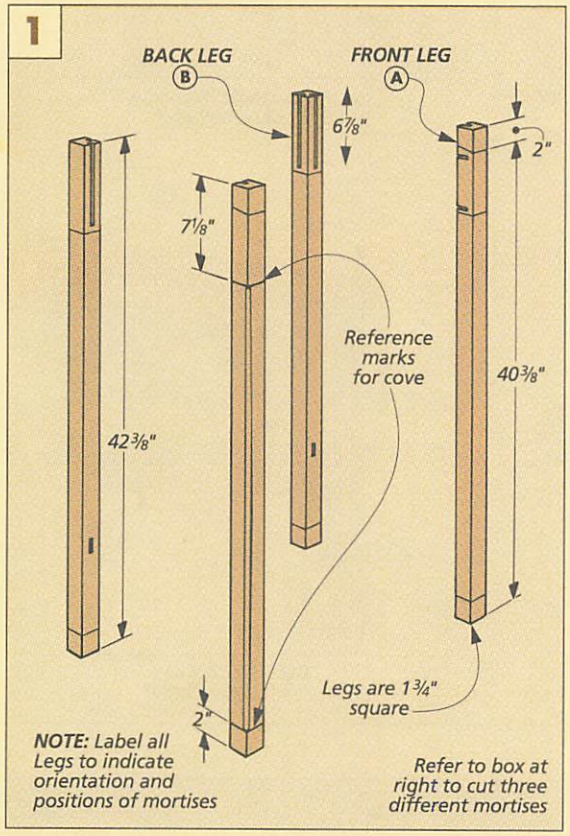

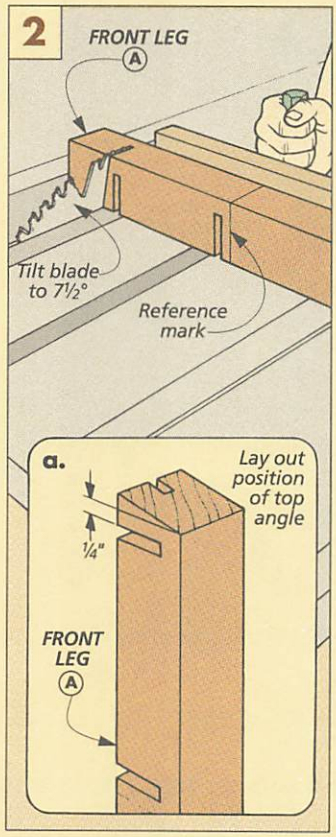

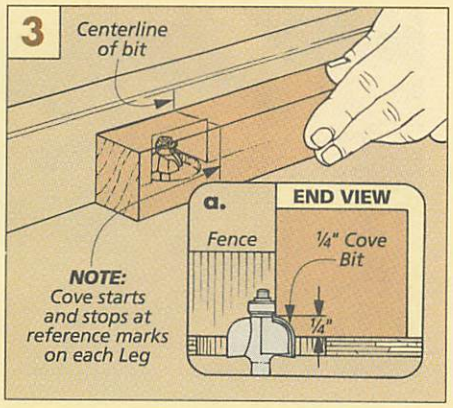

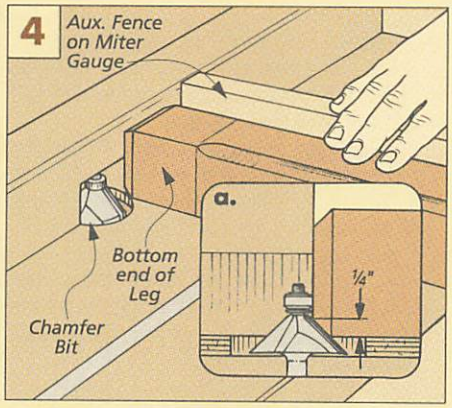

LEG MORTISES

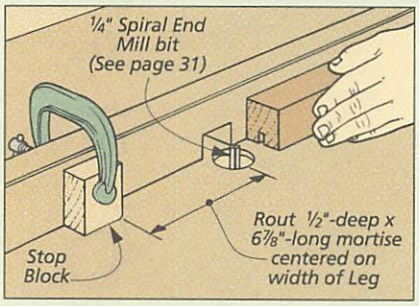

The long mortises on each leg are easiest to cut on the router table. Rout two on each back leg and one on each front leg.

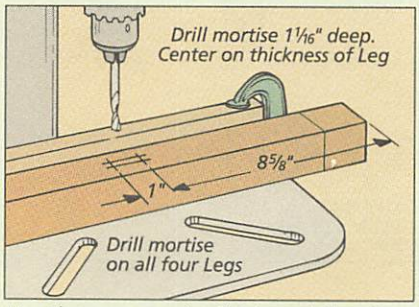

Use the same end mill bit to drill a short mortise toward the bottom of each leg. Mortises are centered on thickness of legs.

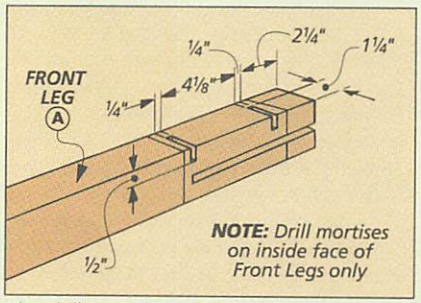

The drill press is used again for the last pair of mortises toward the top of the front legs. Drill carefully between the layout lines.

APRONS, RAILS & STRETCHERS

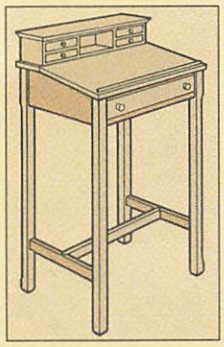

The legs are just four long sticks until they're connected together. That's the job of a series of aprons, rails, and stretchers, see Fig. 5.

I began by cutting all the various connecting pieces to size. Then I cut tenons on the ends.

APRONS. The widest pieces to cut are the two **side aprons (C)** and the **back apron (D)**, see Fig. 5.

RAILS. Next, I cut a pair of **drawer rails (E)** to finished size, see Fig. 5.

STRETCHERS. The **base stretchers (F)** that connect the legs toward the bottom are different from the aprons and rails. First, they're thicker (1" instead of ¾"). And they're longer than the side aprons (because they have longer tenons for added strength).

TENONS. After all the connecting pieces have been cut to finished dimensions, cut the tenons on the ends of the drawer rails (E), see Fig. 6.

BEVELED STRIP. Now cut a **beveled strip (G)** to match the shoulder-to-shoulder length of the upper rail. (This strip is to hide a gap that shows up between the rail and angled top after the top is attached.)

Next, dry assemble the front legs with the rails in between, see Fig. 7. Then mark the bevel angle on the end of the beveled strip, see Fig. 7. And rip the bevel on the strip (G).

MORE TENONS. Now tenons can be cut on the ends of the stretchers (F), see Fig. 8.

Then rabbets can be cut on the ends of all three aprons (C & D) to form tenons, see Fig. 9. After that, notch the bottom of the tenons to fit in the mortises, see Fig. 9.

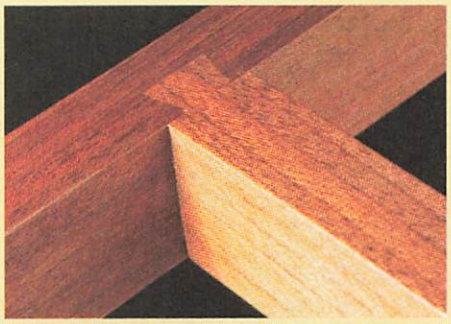

A dovetail can be cut to act like a mortise and tenon joint. With strength in several directions. And a pleasing appearance, too.

DOVETAIL MORTISE. The last thing to do is rout a dovetail mortise in the middle of each of the stretchers. Note: Refer to page 14 for details on routing dovetail mortises.

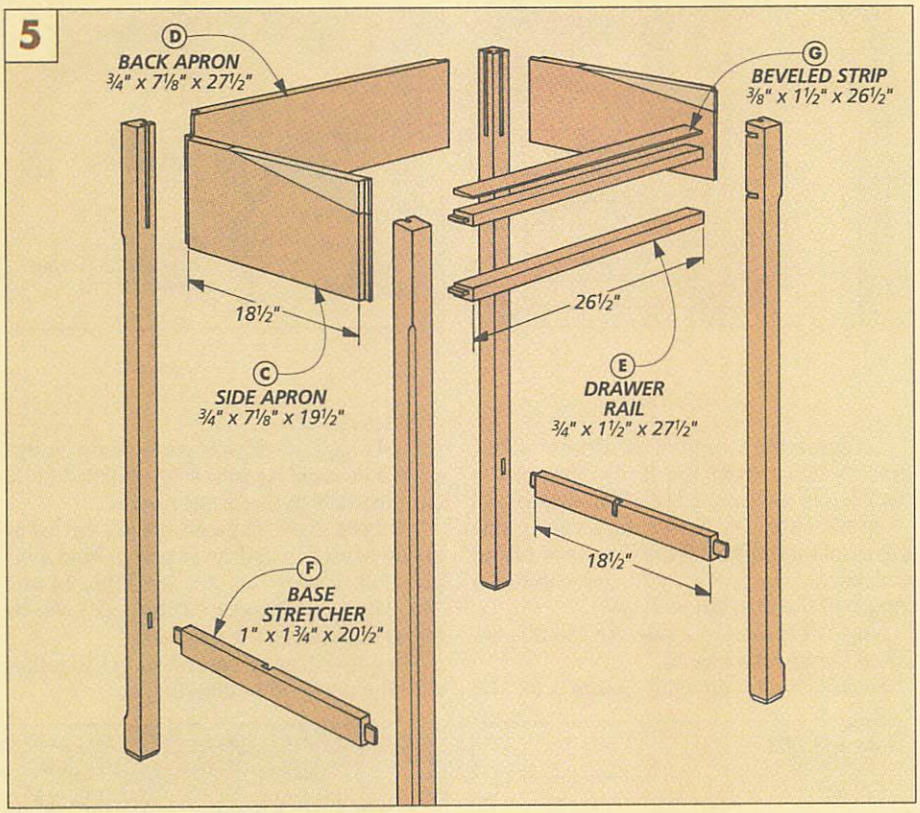

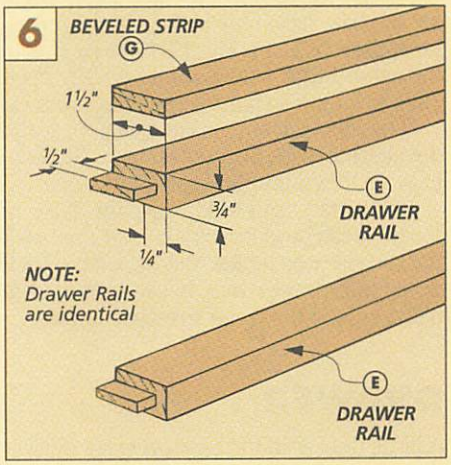

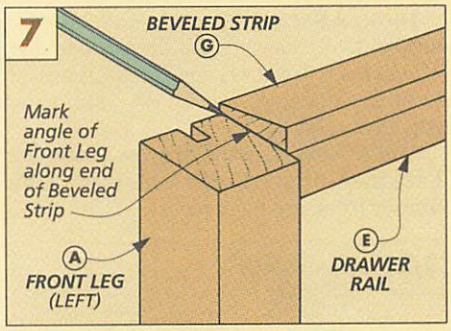

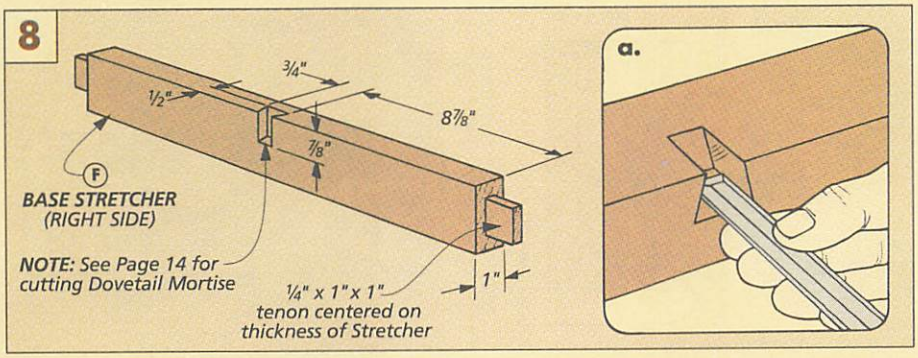

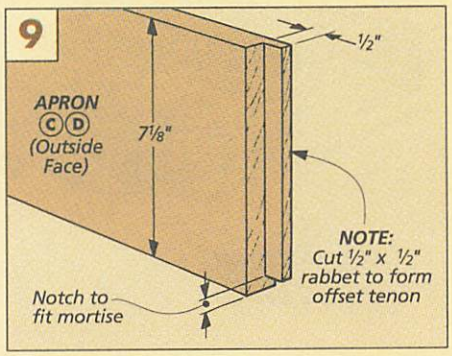

BASE ASSEMBLY

There are a couple more things to do before the base of the Desk is complete.

CUT OFF SIDE APRONS. First, the top of the side aprons must be cut off at an angle so the writing surface of the Desk can slope.

To do this, first make a mark 6½" from the back edge of the back leg to indicate the flat area of the aprons, see Fig. 10. Then, draw a line from this mark to the front leg.

Now, remove the aprons from the assembly and cut along the angled marks, see Fig. 11. I cut just outside the line with my band saw, then hand planed up to the line.

SCREW HOLES. The writing surface of the Desk is attached to the base with screws from below. At the front, the screws come up through holes in the drawer rail, see Fig. 12. So next remove the upper drawer rail and drill a series of countersunk shank holes, see Fig. 12a.

CROSS STRETCHER. The last piece to cut for the base assembly is the 1"-thick **cross stretcher (H)**, see Fig. 13. First rip this to the same width as the stretcher (F). Then cut it to length so it fits across the mortises.

Next, dovetail tenons can be cut to fit the dovetail mortises in the stretchers. (Refer to page 15 for cutting dovetail tenons.)

ASSEMBLY SEQUENCE. Now, the base of the Desk can be glued together. I started with the two side assemblies, then glued the back apron and drawer rails between these. Finally, I glued the cross stretcher in place.

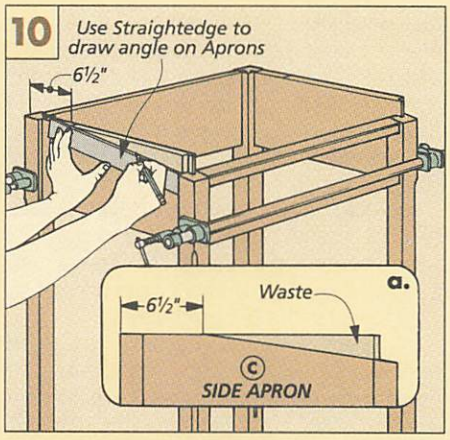

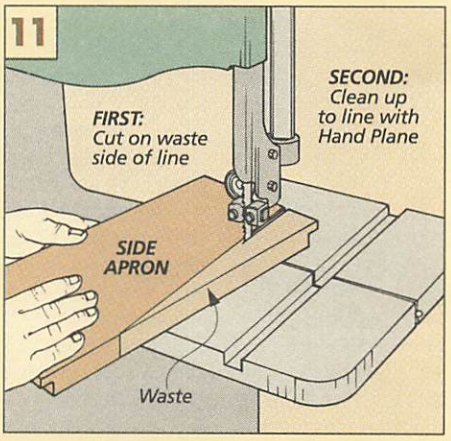

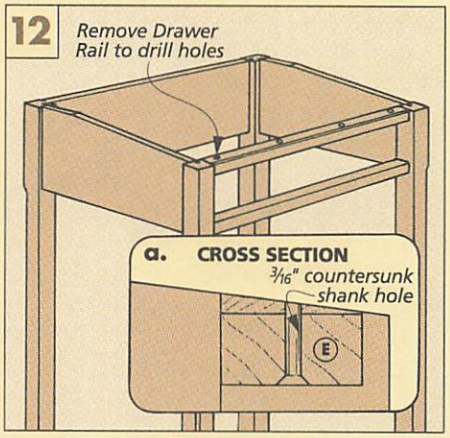

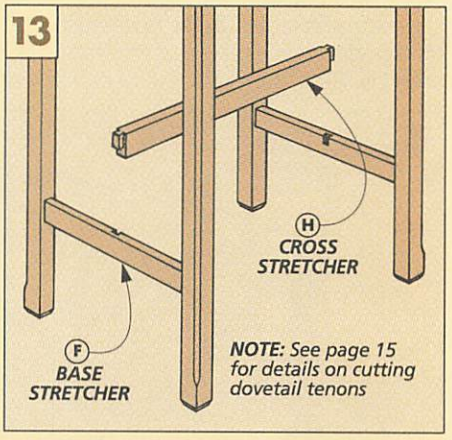

DRAWER

A large drawer in the base provides most of the storage for the Desk.

FRONT & BACK. I started building the drawer by measuring the drawer opening. The **drawer front (I)** and **back (J)** are cut to fit this opening, *minus* ⅛". (For a 1/16" gap all around.)

SIDES. Next, I cut the **drawer sides (K)**. First, they're ripped to the same width as the drawer front and back pieces.

To figure the length of the drawer sides, first measure from the front edge of the back leg to the front edge of the drawer rail — in my case 20". Now subtract from this the combined thickness of the drawer front and back (1¼"), then add the combined length of the dovetail pins (⅝").

Now cut the drawer sides (K) to this finished length, see Fig. 14.

JOINTS. Next, dovetail joints can be routed on all the drawer parts. Shop Note: I used a dovetail jig with a ½" dovetail bit to cut the joints in the drawer parts.

BOTTOM. Now, cut a groove on the lower inside face of each drawer part to hold a ¼" plywood drawer bottom, see Figs. 14 and 14a. Then the **drawer bottom (L)** can be cut to fit between the grooves.

Now the drawer can be glued together with the plywood bottom in place.

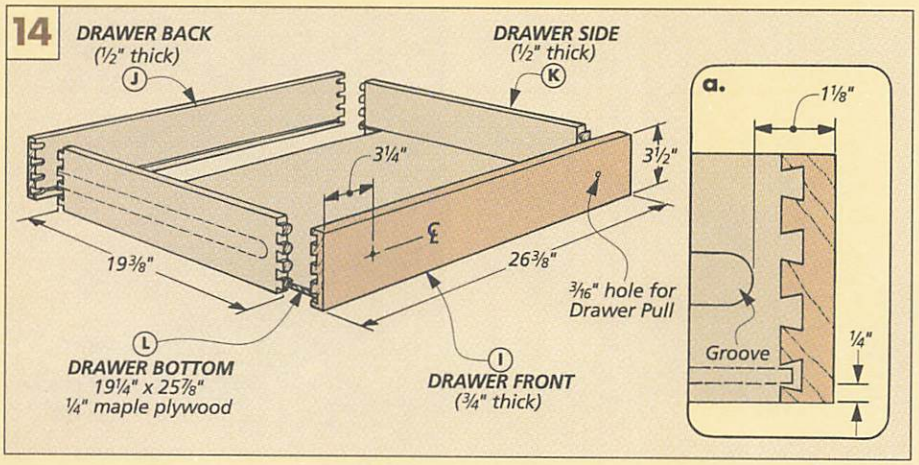

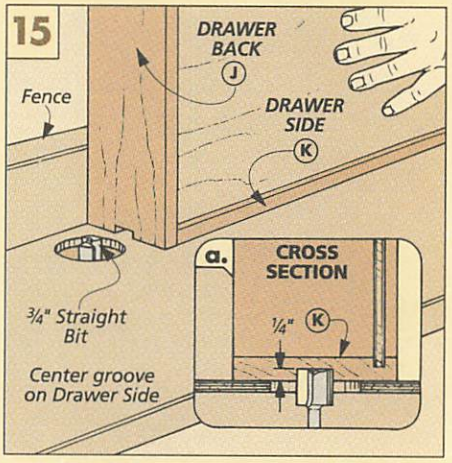

DRAWER GROOVES. The drawer slides on maple drawer runners that fit in a groove on either side of the drawer, refer to Fig. 17.

To cut the grooves, I used a straight bit in the router table, see Fig. 15. Note: Stop the grooves 1⅛" from the front, see Fig. 14a.

RUNNERS. Now cut a pair of **drawer runners (M)** to fit the grooves in the drawer sides, see Figs. 16 and 16a. The runners are held in place with screws in counterbored holes. Then screw the runners to the inside of the side aprons, see Fig. 16a.

STOPS. Finally, to keep the drawer from sliding too far into the opening, a pair of drawer stops can be added. These are simply two short blocks cut to fit between the inside face of the back apron and the inside face of the back legs, see Fig. 16.

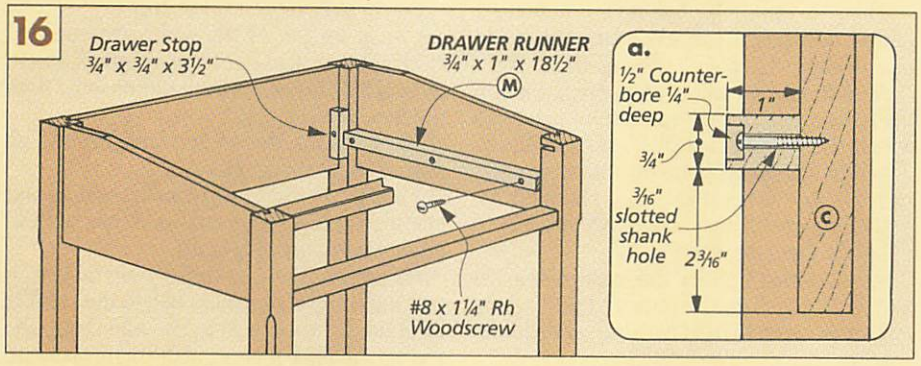

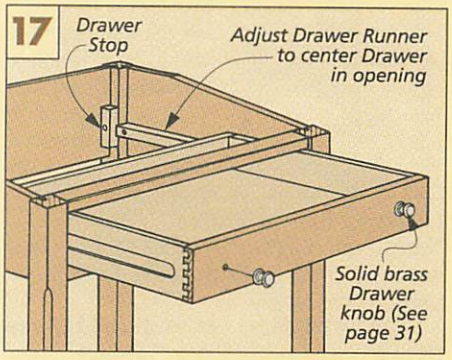

TOP ASSEMBLY

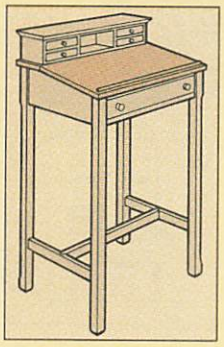

The top of the Desk consists of two parts. The back section is installed flat, and the front rests at an angle that is comfortable for writing — either while standing up or sitting on a stool.

CUT TO LENGTH. I started the tops by gluing up several narrower boards for each. Note: Use the best looking boards for the slant top — it's the most noticeable piece on the whole project.

First, cut the **flat top (N)** and **slant top (O)** to the same finished length — 1" longer than the total width of the base, see Fig. 18.

BEVEL RIP. I ripped the top pieces to finished width in two steps. First, I ripped a bevel with a 3¾° angle on the inside (common) edge of each piece, see Fig. 18a.

Then, rip the back edge of the flat top (N) so the front edge aligns to the point where the side apron starts to slope downward. The back edge should extend ½" beyond the back legs, see Fig. 18a.

The slant top (O) can then be ripped to finished width the same way, see Fig. 18a.

CLEATS. The next thing to do is cut five narrow **cleats (P)** for attaching the tops to the base assembly, see Fig. 18. Then drill a series of oversize countersunk shank holes for the mounting screws. And glue the cleats to the inside face of each apron.

Shop Note: I attached the cleats a little *below* the upper edge of the aprons. This way, the tops can be screwed down tightly.

PENCIL REST. Before installing the tops, I cut a narrow **pencil stop (Q)**, see Fig. 19.

Then sand a 1/32"-wide chamfer around the upper and lower edges of the top pieces (N, O), see Fig 19a. Also sand a chamfer along the top edges of the pencil stop.

Finally, the two top pieces can be attached to the base with woodscrews from below. Note: Glue the top pieces together, but *don't* glue them to the aprons. (They must be able to move with changes in humidity.)

Then glue on the pencil rest, see Fig. 19a.

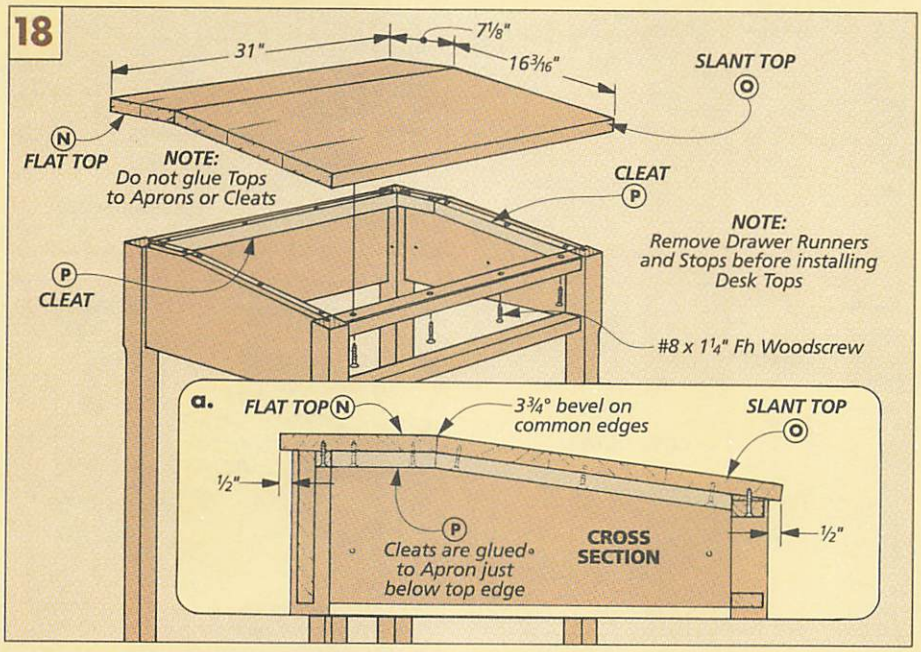

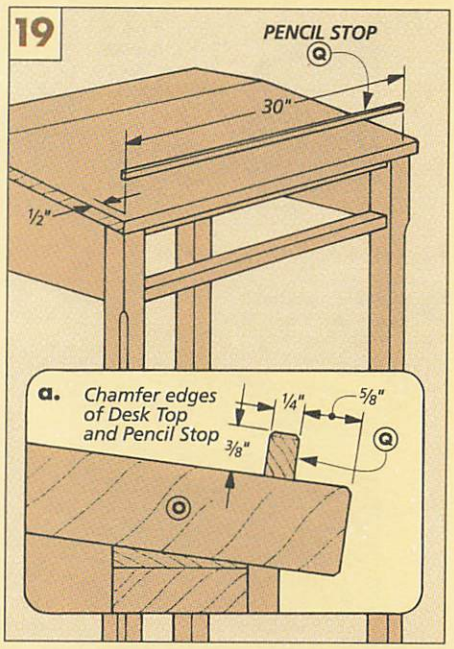

COMPARTMENT BOX

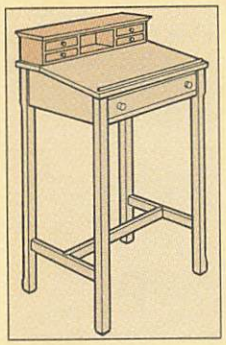

A compartment box on top of the Desk does two things. First, it adds storage space to the Desk. It also helps to organize small supplies within easy reach of the writing surface.

THIN STOCK. In order to keep the compartment box from looking too massive, I built all the parts from ½"-thick stock. Note: If you can't find ½"-thick walnut, plane down ¾"-thick stock from the same batch used for the base.

Start by cutting a **case top** and **bottom (R)** and **case sides (S)** to finished dimensions, see Fig. 20.

GROOVES, RABBETS, DADOES. Next, to accept a solid wood back (V), I cut a groove toward the back edge of all four pieces, see Fig. 20a. Note: I used a straight bit in the router to cut all the joints in this case.

Then, to hold the top and bottom (R) pieces, cut a pair of rabbets across the inside face of each side piece, see Fig. 21.

After that, cut a pair of stopped dadoes on the inside face of the top/bottom pieces to accept the vertical case dividers, see Fig. 22.

DIVIDERS. At this point the four case parts can be dry assembled and clamped together. Then cut two **case dividers (T)** to fit inside the case, see Fig. 22.

MORE DADOES. Now the case sides (S) and dividers (T) can be removed, and a dado cut across each to hold two drawer dividers, see Fig. 22.

DRAWER DIVIDERS & CASE BACK. With all the dadoes complete, two **drawer dividers (U)** and a **case back (V)** can finally be cut to fit in the dadoes and grooves, see Fig. 23.

Then the case parts can all be glued and clamped together.

FALSE TOP. Now a **false top (W)** can be cut to fit on top of the compartment box. Note: This is also cut from ½"-thick stock, but cut it 1" larger in both dimensions than the box, see Fig. 24.

Then, rout a decorative cove around all four sides, see Fig. 24a.

Finally, the false top can be glued and clamped onto the compartment box with an equal overhang all around.

DRAWERS. The last thing to do before attaching the compartment box to the Desk is to build drawers to fit in the openings, see Fig. 25. And like the rest of the compartment, the drawers are made from ½"-thick stock.

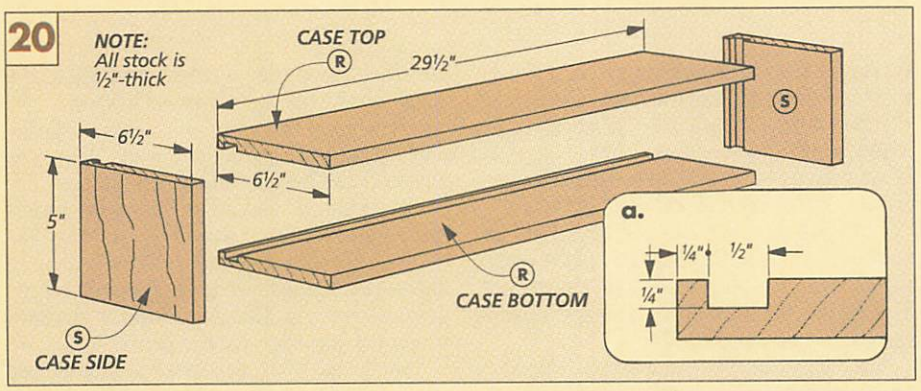

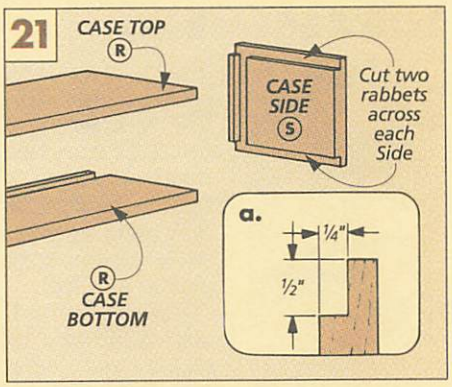

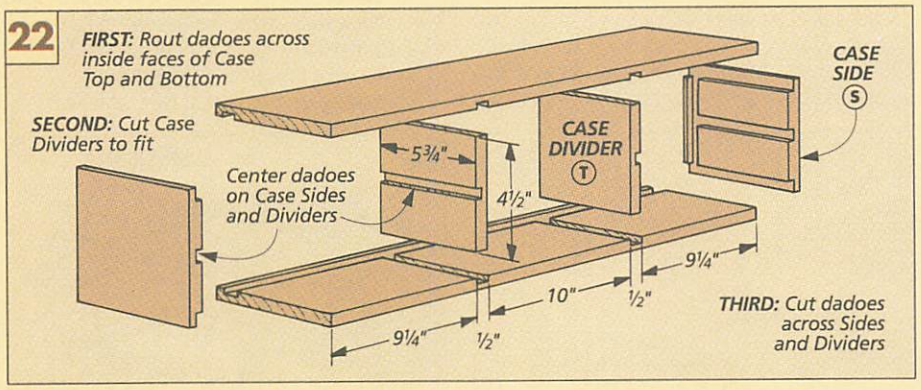

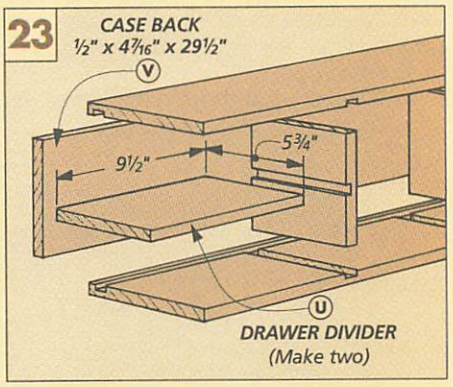

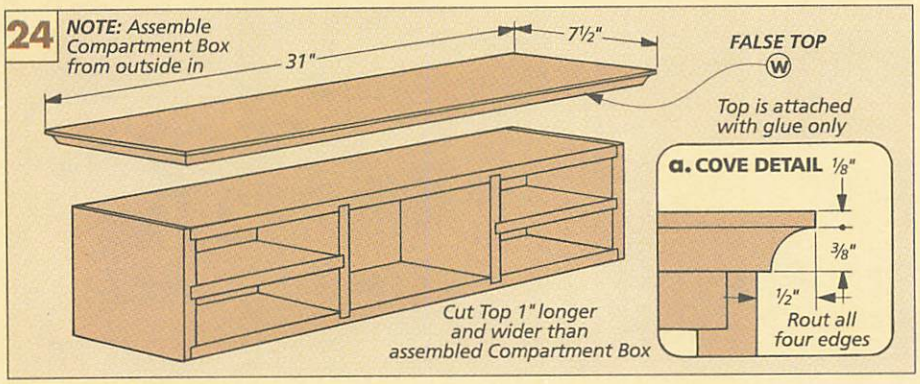

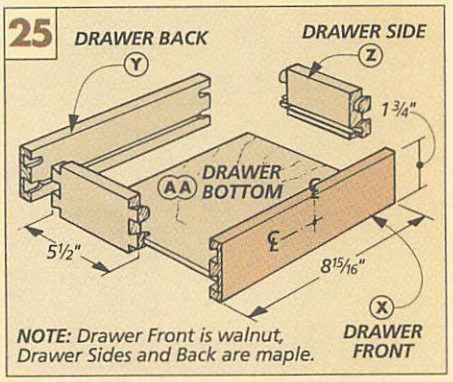

Note: I used walnut for the **drawer fronts (X)**, and hard maple for the **drawer backs (Y)** and **sides (Z)**, see Fig. 25.

Also note that I cut the drawer fronts and backs 1/16" *smaller* than the width of the drawer openings. But they're cut to width to *match* the height of the openings.

This way the top edges of each drawer can be lightly sanded (or planed) to fit its opening with equal-size gaps around the top and sides, refer to the photo on page 3.

DOVETAIL JOINTS & GROOVE. With all the drawer parts cut to finished dimensions, I routed 1/2" dovetail joints on the corners.

Next I cut a groove on each part to accept a 1/4" plywood drawer bottom, see Fig. 25.

Then, a **drawer bottom (AA)** can be cut for each drawer. And the drawers can be assembled and glued up.

ATTACHING TO DESK. Finally, attach the compartment box to the Desk. For this I used woodscrews installed from below the desk top, see Figs. 26 and 26a.

Note: I completely finished the compartment box — top, bottom, inside and out — before permanently screwing it down.

MATERIALS

A	Front Legs (2)	1 3/4 x 1 3/4 - 42 3/8 rgh.
B	Back Legs (2)	1 3/4 x 1 3/4 - 42 3/8
C	Side Aprons (2)	3/4 x 7 1/8 - 19 1/2
D	Back Apron (1)	3/4 x 7 1/8 - 27 1/2
E	Drawer Rails (2)	3/4 x 1 1/2 - 27 1/2
F	Base Stretchers (2)	1 x 1 3/4 - 20 1/2
G	Beveled Strip (1)	1/4 x 1 1/2 - 26 1/2
H	Cross Stretcher (1)	1 x 1 3/4 - 28 1/4
I	Drawer Front (1)	3/4 x 3 1/2 - 26 3/8
J	Drawer Back (1)	1/2 x 3 1/2 - 26 3/8
K	Drawer Sides (2)	1/2 x 3 1/2 - 19 3/8
L	Drawer Bottom (1)	1/4 ply - 19 1/4 x 25 7/8
M	Drawer Runners (2)	3/4 x 1 - 18 1/2
N	Flat Top (1)	3/4 x 7 1/8 - 31
O	Slant Top (1)	3/4 x 16 3/16 - 31
P	Cleat	3/4 x 3/4 - 80 rgh.
Q	Pencil Stop (1)	1/4 x 3/8 - 30
R	Case Top/Bott. (2)	1/2 x 6 1/2 - 29 1/2
S	Case Sides (2)	1/2 x 6 1/2 - 5
T	Case Dividers (2)	1/2 x 5 3/4 - 4 1/2
U	Drawer Dividers (2)	1/2 x 5 3/4 - 9 1/2
V	Case Back (1)	1/2 x 4 7/16 - 29 1/2
W	False Top (1)	1/2 x 7 1/2 - 31
X	Case Drawer Fr. (4)	1/2 x 1 3/4 - 8 15/16
Y	Case Drawer Bk (4).	1/2 x 1 3/4 - 8 15/16
Z	Case Drawer Sides (8)	1/2 x 1 3/4 - 5 1/4
AA	Case Drawer Bott. (4)	1/4 ply - 5 x 8 7/16

SUPPLIES

(2) 25mm Solid Brass Drawer Knobs (w/ screws)
(4) 14mm Solid Brass Drawer Knobs (w/ screws)
(20) #8 x 1 1/4" Fh Woodscrews
(6) #8 x 1 1/4" Rh Woodscrews
(6) #8 x 1" Rh Woodscrews

26

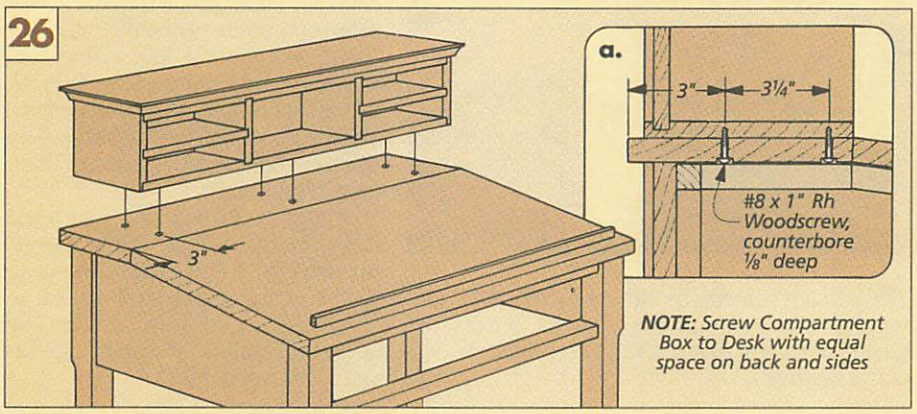

CUTTING DIAGRAM

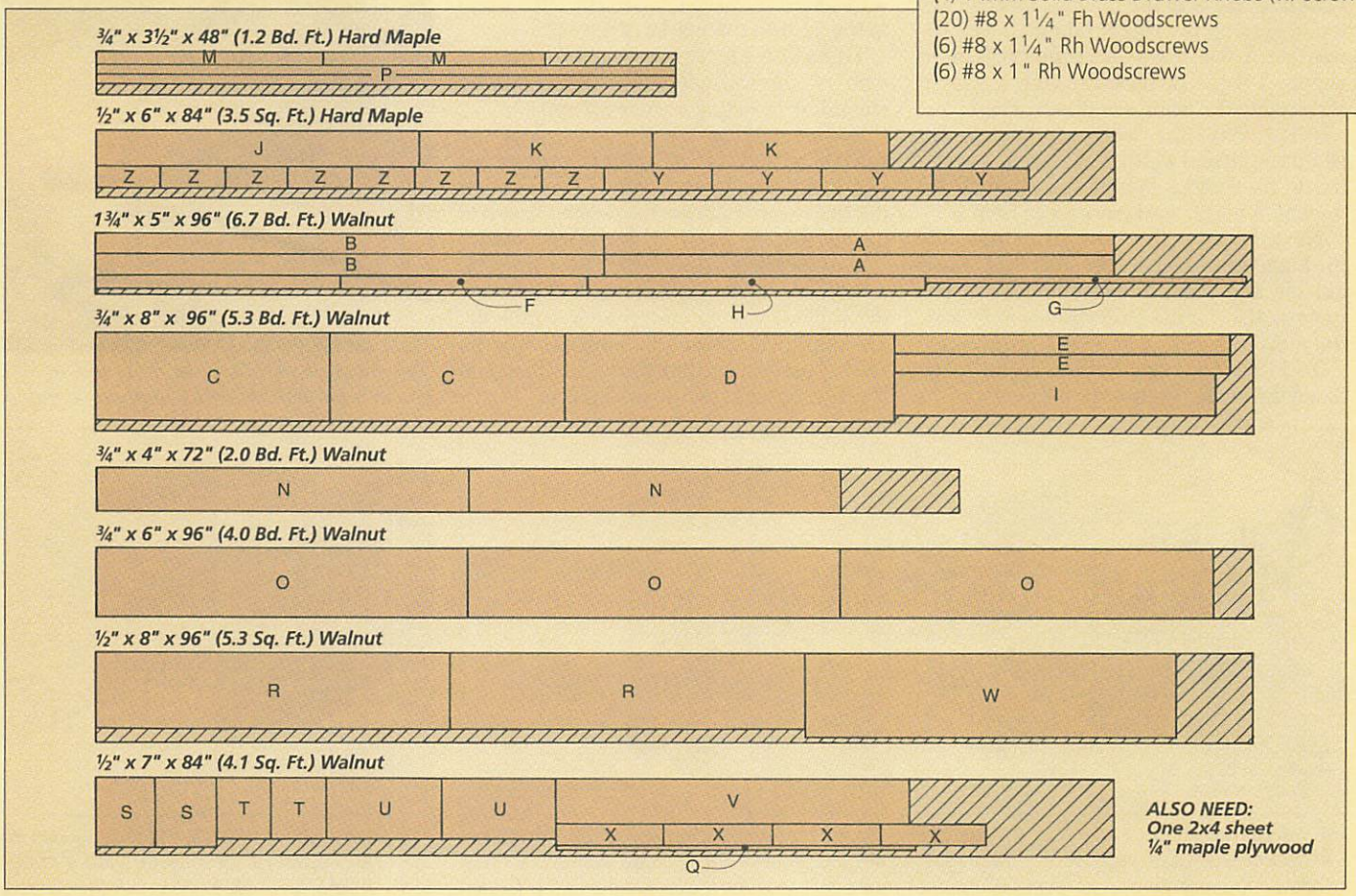

Dovetail Mortise & Tenon

There must be forty ways to join two boards at a right angle. A couple of the strongest joints are a mortise and tenon and a dovetail. But as the design of the Stand-up Desk on page 6 was underway, I knew there was a different joint needed for connecting the cross stretcher to the base stretchers.

The photo at right shows the result, a dovetail mortise and tenon. The tenon part of the joint works like an ordinary tenon, only better. Because of its dovetail shape, the tenon fits into the mortise like the couplers on a freight train. So there's mechanical strength and additional strength after the joint is glued.

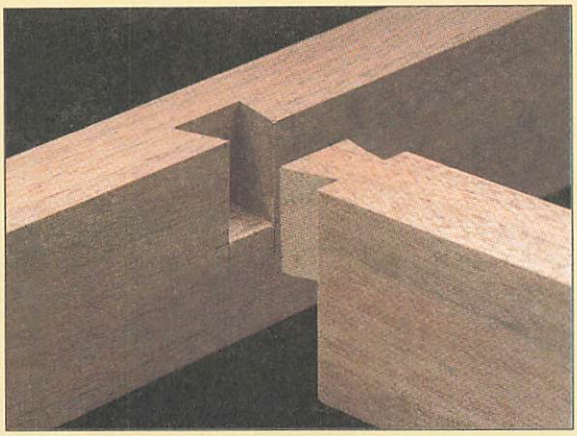

HAUNCH. One of the most important parts of this dovetail mortise and tenon joint is the "haunch" at the bottom of the tenon, see photo. It's what makes the joint different from an ordinary sliding dovetail. The haunch is made by cutting off the bottom half of the tenon. This shoulder of the tenon then can rest on a "shelf" at the bottom of the mortise.

So why the haunch? One reason — to keep the tenon from sliding out the bottom of the mortise. This is especially important for the stretcher on the base of the Stand-up Desk. If the glue were to fail on a *through* sliding dovetail joint, this stretcher could drop out from between the rails.

THE SEQUENCE. I follow the same sequence for cutting a dovetail mortise and tenon joint as I do for a regular mortise and tenon joint. First I cut the mortise, then I cut the tenon to fit the mortise perfectly.

TEST CUTS. As with any joint (especially one that will be visible after it's assembled), I don't start cutting on the actual workpiece. Instead, I make a series of test cuts on scrap wood first. This way, the parts of the joint should fit together tightly and look good, too.

THE MORTISE

I cut both parts of the dovetail mortise and tenon joint on the router table. To rout the mortise, I use a two-piece guide. This is simply a piece of plywood with a runner screwed to the front, see photo at right.

SETUP. With the workpiece cut to finished length and width, first raise the router bit to the desired height (usually half the thickness of the workpiece), see Step 1.

Next, because the dovetail mortise (on the Stand-up Desk) is wider than a ½" dovetail bit, the mortise must be cut in two passes. Also, for the stretchers on the Desk, the mortise is centered on the workpiece.

To do this, first mark the center of the router bit on the guide. Then mark the center of the workpiece, see Step 1. Now attach the piece to the jig with the marks offset ⅛".

This setup is for the first cut. (For the second cut, the workpiece and the jig will be shifted by inserting a spacer strip.)

Before making the first cut, slide the workpiece and the jig up to the router bit and make one *more* mark — this time on the table — to indicate the desired length of the mortise, see Step 1. (This is a "stop" mark.)

SPACER STRIP. After making the first cut, a ¼"-thick spacer strip is inserted between the router table and the runner on the jig, see Step 2. This moves the workpiece for the second pass. So the mortise is cut wider, and it's still centered on the workpiece.

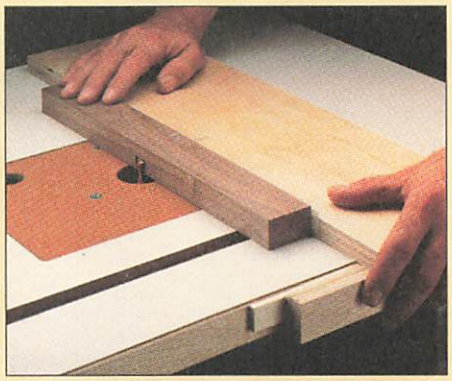

The dovetail-shaped mortise is cut on the router table with the help of a plywood guide.

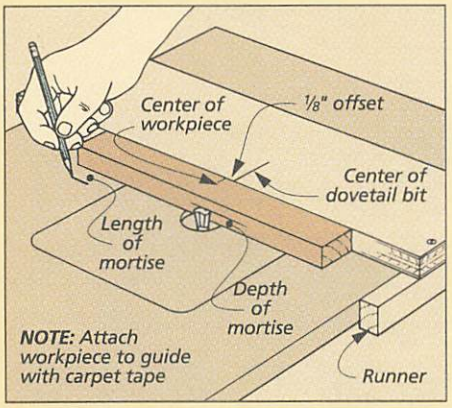

1 *Adjust height of router bit to half the thickness of the workpiece. Then mark center of the workpiece and center of the bit.*

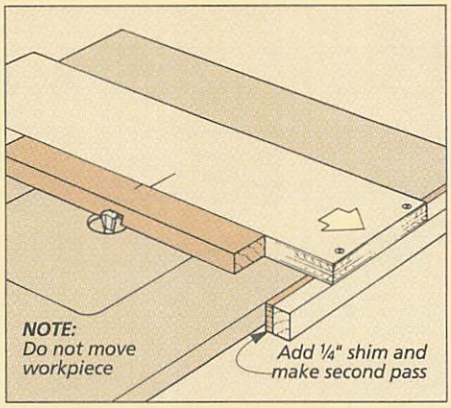

2 *To center the mortise on the workpiece, the second cut is made with a ¼"-thick shim between the router table and the runner.*

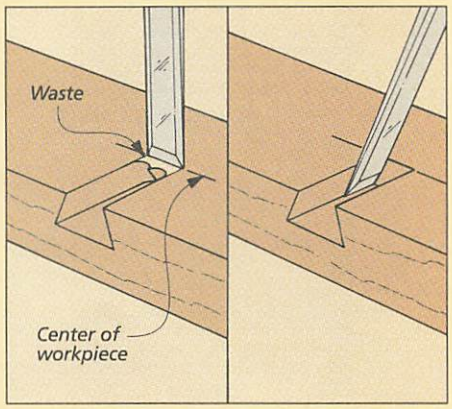

3 *After making the second cut, square up the bottom of the mortise with a chisel. Hold chisel at an angle to clean out the corners.*

THE TENON

The whole secret to cutting a perfect dovetail tenon is holding the workpiece straight up and down while it passes over the router bit. And to do this I use another jig. This one is two pieces of scrap screwed together at right angles, see Step 4.

The horizontal part (the runner) of the jig rides on the router table fence, and the vertical part (the upright) supports the workpiece and prevents chipout. Note: The end of the workpiece must be perfectly flat on the router table when it's clamped to the jig.

ROUTER BIT. The router bit stays at the same height as when cutting the mortise. And to cut the joint properly, the bit must be partially buried in the router fence, see Step 5.

SNEAKING UP. For the best fit in the mortise, I cut the tenon in several steps. (The best fit is when the tenon slides part way into the mortise but needs to be tapped the rest of the way in.)

First, I cut the tenon a bit "fat." Then, move the fence a little away from the bit to sneak up on the exact thickness, see Step 6.

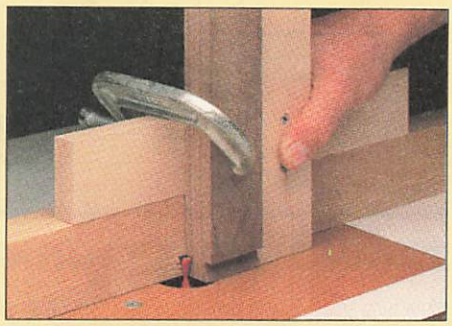

A jig and clamp hold the workpiece while the tenon is cut with the same dovetail bit.

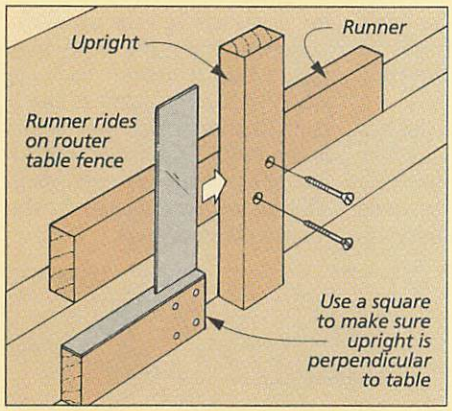

4 *The jig for cutting the tenon has two parts. One rides the router table fence. The other holds workpiece square to the table.*

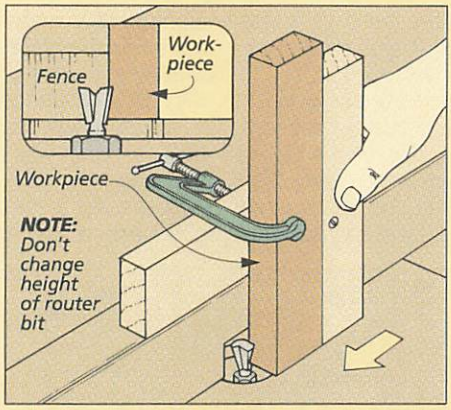

5 *The router bit must be buried in the fence. Then the piece is clamped to the jig. Slide piece and jig to rout first shoulder.*

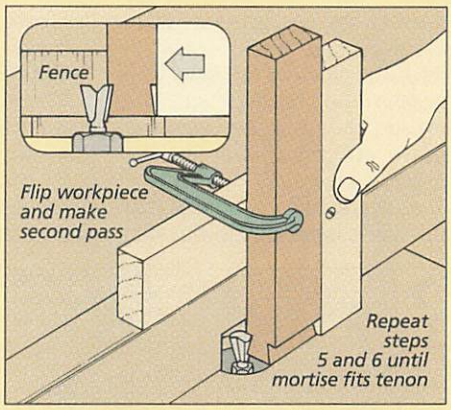

6 *To rout the second shoulder, just unclamp the workpiece and turn it around. For the best fit, move fence and repeat steps 5 and 6.*

FITTING THE TENON

The last part of a dovetail mortise and tenon joint is cutting the haunch. But there aren't any special jigs needed — just a pencil and back saw.

FIT & MARK. In order to determine where to cut off the tenon, I first slid the tenon into the mortise *upside down*, see Step 7. When it's fully seated, draw a pencil line across the end of the tenon.

Then cut across the end of the tenon, just *outside* the mark (toward the waste side), see Step 8. After that, make a second cut along the shoulder of the tenon intersecting the first cut, see Step 9. (Again, make this cut a little fat.)

TRIM & INSTALL. Finally, I used a chisel to shave the sides of both saw cuts. This is the way to get the best fitting joint — trim a little, test the fit, then trim a little more.

Finally, glue can be spread on the tenon. Shop Note: To avoid a mess, apply just a little glue along the buried (inside) cheeks of the tenon. Then the joint can be lightly tapped together, see photo.

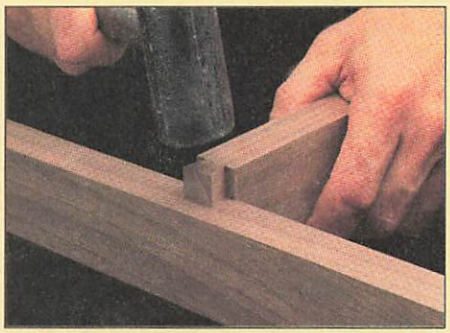

After a haunch has been cut on the tenon, the joint can be glued and assembled.

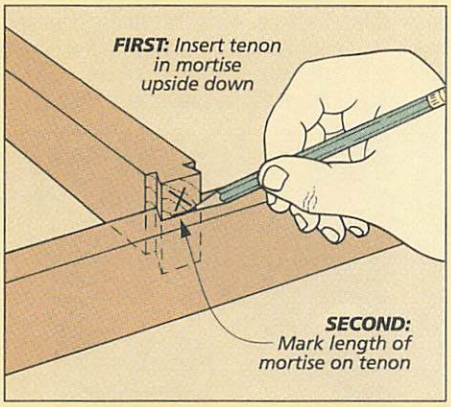

7 *Insert the tenon — upside down — completely in the mortise. Then draw a pencil mark across the end of the tenon.*

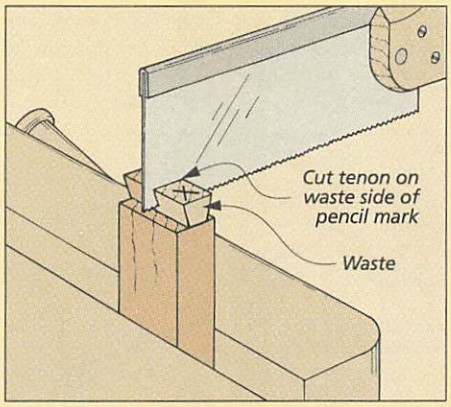

8 *To form the haunch, use a hand saw to cut on waste side of the mark. Keep the saw straight up and down and stop at shoulder.*

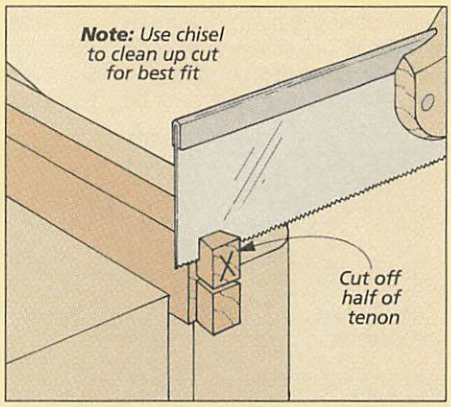

9 *The second saw cut completes the haunch. Finally, for the best fit, both cuts may need to be lightly shaved with a chisel.*

Shop Notes

TRUING YOUR TRUNNION

■ When you rip or crosscut on a table saw, the blade should be parallel with the miter gauge slot. Why? As wood moves through the cut, pressure from a misaligned blade tends to push the wood to the side. The greater the misalignment the greater the pressure. This can throw off critical cuts like the miters on page 22.

CHECK BLADE. To check that the blade is parallel to the slot, unplug the saw and raise the blade up all the way. With a felt-tip marker, mark one of the teeth. Now rotate this tooth to the front of the insert plate and measure the distance from the tooth to the slot, see Fig. 1.

After measuring the distance at the front, rotate the marked tooth to the rear of the insert plate and measure again. The distance should be the same. If not, it's time to adjust your saw.

TRUNNION. To adjust the saw, the trunnion assembly has to be shifted in relation to the table. (The trunnion is the heavy casting mounted under the table that holds the blade.) Note: On cabinet-type saws, it's the table that has to be shifted.

Unfortunately, there isn't a quick or easy way to do this. First, loosen the mounting bolts, see Fig. 2. Next, you need to "convince" the trunnion to move. I use a block of wood and a hammer, see Fig. 3. (It might take a few good whacks.) Now, re-tighten the bolts and check if the blade and slot are parallel.

Re-tightening the bolts may move the trunnion back to where it started (almost like it has a memory of its own). If this is the case, "overshoot" the adjustment before re-tightening. This should compensate for the unwanted movement.

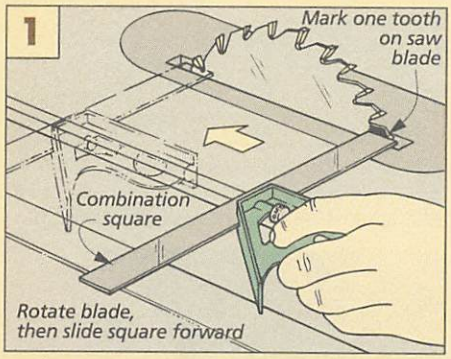

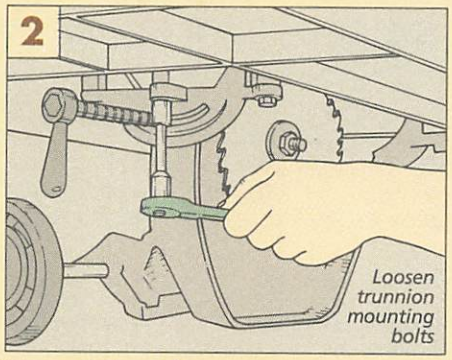

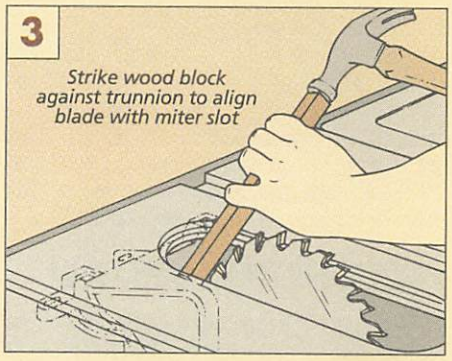

Safety Note: *Unplug saw before making these adjustments*

FENCE ADJUSTMENT

■ How do you know if a fence on a router table has been moved a smidgen? It's hard to measure with a ruler. And guessing can end up becoming a game of trial and error. So to get around this, I give myself a reference mark to eyeball off of when moving the fence a small amount.

If the fence is going to be moved *away* from the bit, draw a fine pencil mark on the router table top right along the front of the fence, see Fig. 1. If it's going to be moved *towards* the bit, draw the mark behind the fence.

When the fence is moved, the mark gives your eye a reference point indicating how much the fence has actually moved.

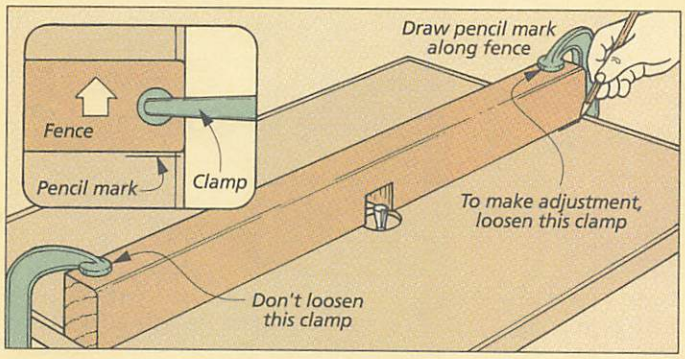

CUTTING ANGLES

■ It can be awkward cutting an angle across a glued-up panel or a sheet of plywood on the table saw. So when I cut the sloped back on the Oak Step Stool (page 24), I decided to use a hand-held router with a flush trim bit, rather than the table saw.

To cut the sloped back, first lay out the cut line. Then, using a sabre saw, cut to within a 1/16" of the line. (This reduces the amount of work for the router).

Next, clamp a straight edge on the layout line. Then flip the panel over, see drawing.

Now, with the flush trim bit set so the bearing rides against the straightedge, clean up the edge of the panel, see detail.

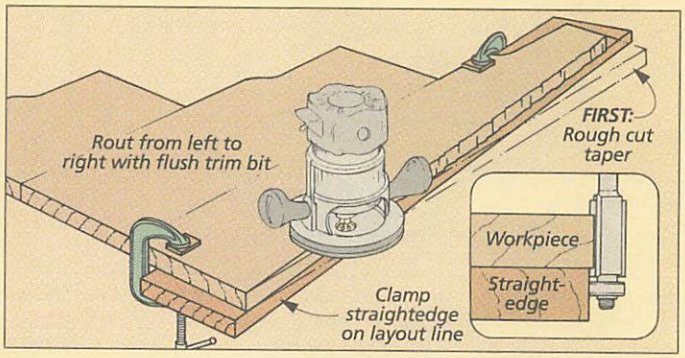

Picture Frames

These picture frames don't require a lot of tiny pieces. They start out as wide blanks, so they're easy and safe to build.

To my way of thinking, a small picture frame should be a quick, easy project to build. But at first glance, these two frames may not look that simple.

Both frames look like they were assembled with lots of tiny pieces or blocks, which might mean a lot of time-consuming setups. But that's not how they're made.

Actually, both frames follow the same general procedure, and it's fairly simple. The difficult part is seeing just how the initial workpieces become finished picture frames. Here's a quick overview.

Each frame is built in three basic steps, see the photos below. First, pieces of different types of wood are glued into a blank. Then frame pieces are ripped from the blank like strips of bacon. Finally, the pieces are mitered and assembled into a frame.

Design Note: These picture frames are designed to accept standard photos with precut mats (see Sources, page 31). The larger Grid Work Frame, shown on page 18, will hold an 8x10 matted photo. The smaller Accent Strip Frame, on page 20, will hold a 5x7 matted photo.

To highlight the details in each frame, I chose woods with contrasting colors. One frame uses mostly cherry with maple trim. The other uses more maple than cherry.

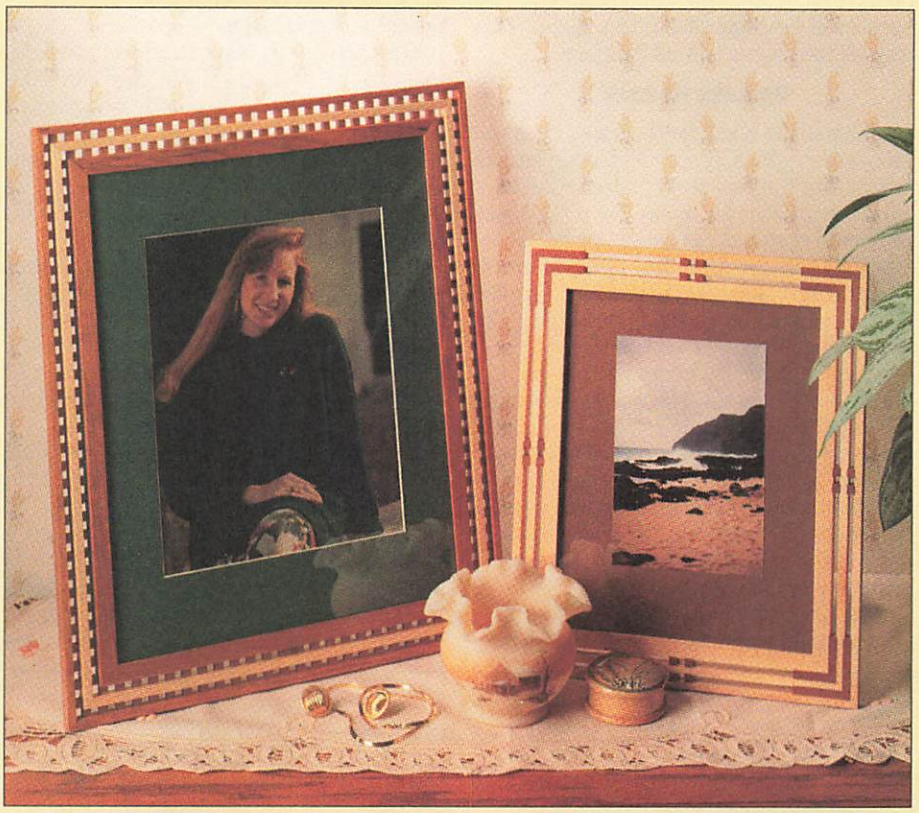

THREE BASIC STEPS

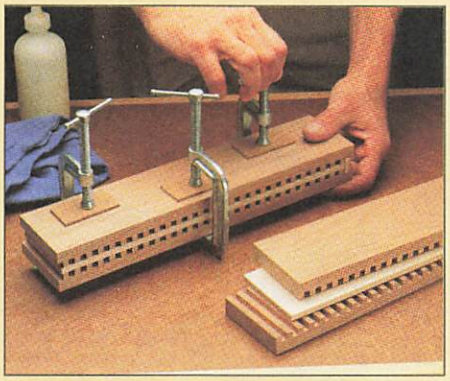

Step 1. *Both frames follow the same basic procedure. First, a wide, thick frame blank is glued up from several thinner boards.*

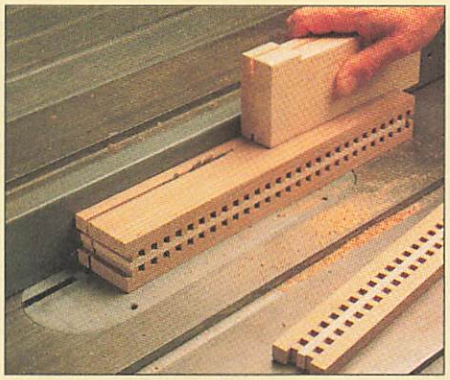

Step 2. *After the blank has been glued up, it's ripped into thin strips. When lying flat, these strips become the pieces of the frame.*

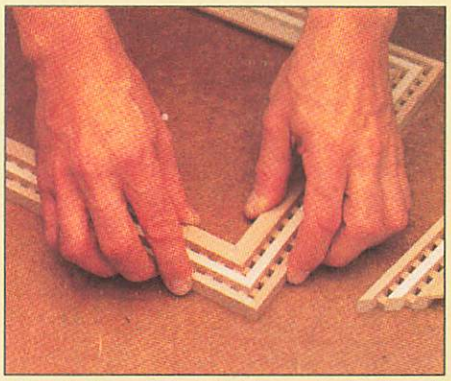

Step 3. *Now, all that's left is to miter both ends of each of the frame pieces and then assemble them into a picture frame.*

GRID WORK PICTURE FRAME

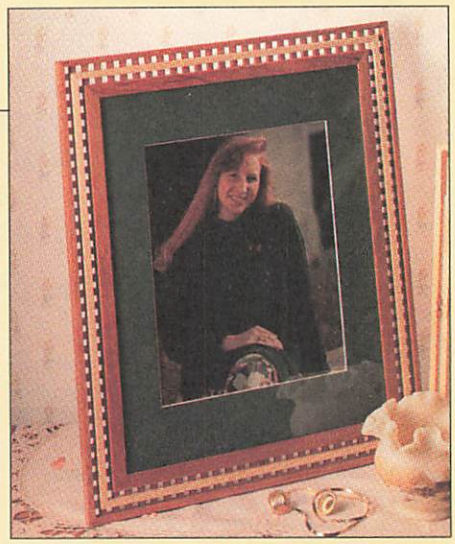

The tiny squares on this frame look like individual blocks. Actually, they're strips of wood with evenly-spaced dadoes (called dentil molding). I cut the dentil profile on the router table, using a simple indexing (or box joint) jig, see box on the next page.

To build the frame, I prepared a single blank first. Later, the four pieces of the frame will be ripped from this blank. This way, all the pieces end up identical.

FRAME BLANK

I laminated the blank for the frame from two pieces of ¾"-thick cherry and a thin strip of maple. But the two cherry pieces start out as one extra-wide piece, see Fig. 1. This way the dentil profile is cut on one piece only.

ROUT DENTILS. After the piece is cut to size, the next step is to cut the dentil profile. (Here's where you'll need the indexing jig.) Rout ¼" x ¼" dentils on the cherry piece, see Fig. 1a. Then rip it into two halves.

LAMINATE BLANKS. Next, plane and cut a ¼"-thick strip of maple to size, see Fig. 2. Then glue it between the pieces of cherry.

Shop Tip: Avoid using too much glue — you don't want to clean up a lot of excess between the tiny squares. To prevent this, I dabbed the glue on with a Q-tip and applied it to the dentil molding only.

KEY. To make sure the dentil profiles were aligned when assembling the blank, I used a small alignment key cut from a piece of scrap, see Fig. 2. This key should fit snug between the dentils and allow the cherry pieces to fully contact the maple strip.

FRAME PIECES

When the glue dries, rip the blank into ½"-thick frame pieces, see Fig. 3. (Cut five — there's an extra just to be safe.)

ROUT GROOVES. Next, to add another element to the design, I decided to inset the dentils. To do this, I routed two grooves through the dentil molding, see Fig. 4.

First, I mounted a ¼" straight bit ¼" high in the router table, see Fig. 4. Then I set the router table fence so the inside of the bit aligned with the maple strip.

Now, rout the first groove. Then to rout the second, all you have to do is rotate the piece end-for-end because the maple strip is centered between the two pieces of cherry.

Check the grooves. If there are slivers of the cherry still visible on the maple, then nudge the fence and repeat the cuts.

TRIM OUTSIDE EDGE. There is one final step to creating the design. I thought it would look best if the outside piece of cherry was a bit narrower. So I trimmed it to leave the face ¼" wide, see Fig. 5

CUT RABBETS. Before mitering, I routed a 9/32"-wide rabbet on the back, inside edge of each piece, see Fig. 6. This will hold the glass, mat, and backing materials. The depth of the rabbet depends on the thickness of the materials you're going to use.

FRAME ASSEMBLY

All that's left is to assemble the frame. First, cut a 45° miter on one end of each piece. To end up with a full opening at each corner, the miter should divide an opening between the dentils exactly in half, see Fig. 7a.

Next, miter the second end to the proper length, see Fig. 7. Design Note: To fit a standard 11x14 mat into the rabbets in the frame, you may need to trim the mat a little.

Note: For some tips on setting up to cut miters, see the article on page 22.

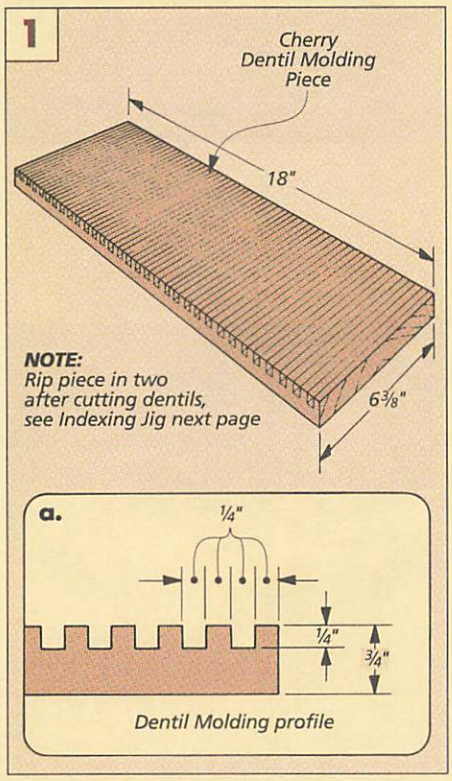

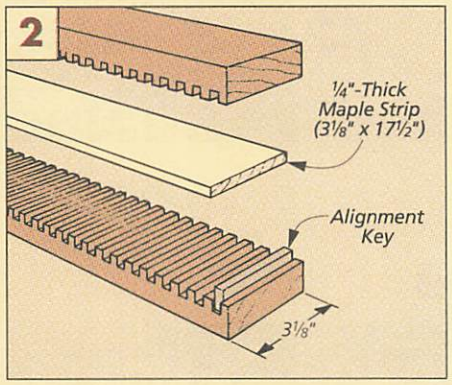

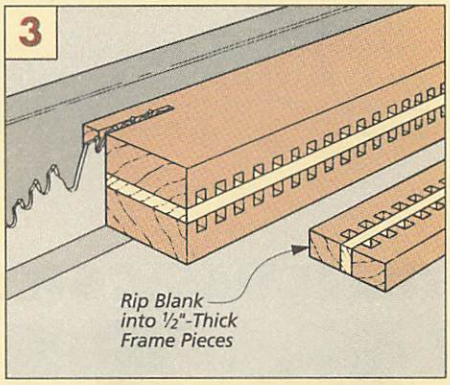

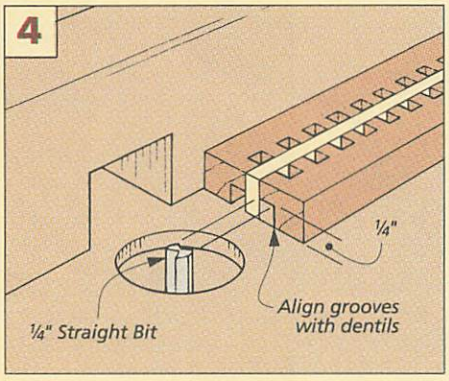

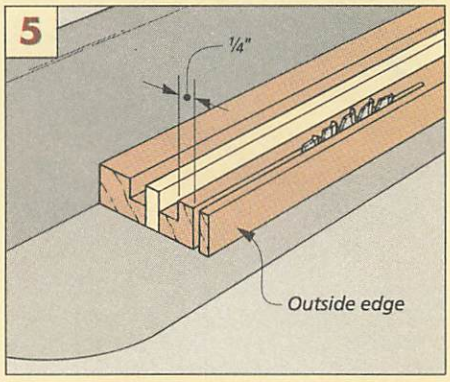

ASSEMBLE FRAME. I assembled the frame in two steps. First, I glued the pieces into two halves, using hand pressure. Then I joined the two halves with a band clamp.

Shop Tip: When gluing end grain to end grain, I seal the wood first with an initial light layer of glue. When it's dry, I apply more glue and assemble the joint.

FINISH. It's best to finish the frame before adding any hardware. To do this, I applied a couple coats of wiping varnish (like Royal Finish, see Sources, page 31).

Shop Tip: If you have a large enough container (and plenty of wiping varnish), you can soak the frame. This way, the finish gets in all the little square openings. To allow the varnish to run off, hang the frame up to dry.

TURNBUTTONS. To keep the glass, mat, and backing materials in place, I nailed eight turnbuttons to the back, see Fig. 7b. (For Sources, see page 31.) To prevent the wood from splitting, predrill the holes. I used a brad with its head cut off as a drill bit.

HANGER & PROP STICK. Next, to hang the frame, I centered a saw tooth hanger on the back of the frame, see Fig. 7.

If you want to set the frame on a desk, cut a prop stick from a piece of scrap like the one shown for the Accent Strip Frame. (Refer to Fig. 11a, page 21.) For the prop stick to fit, it should be ¼" x ¼".

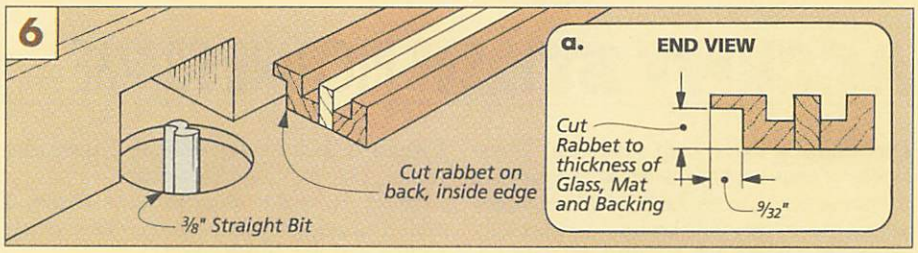

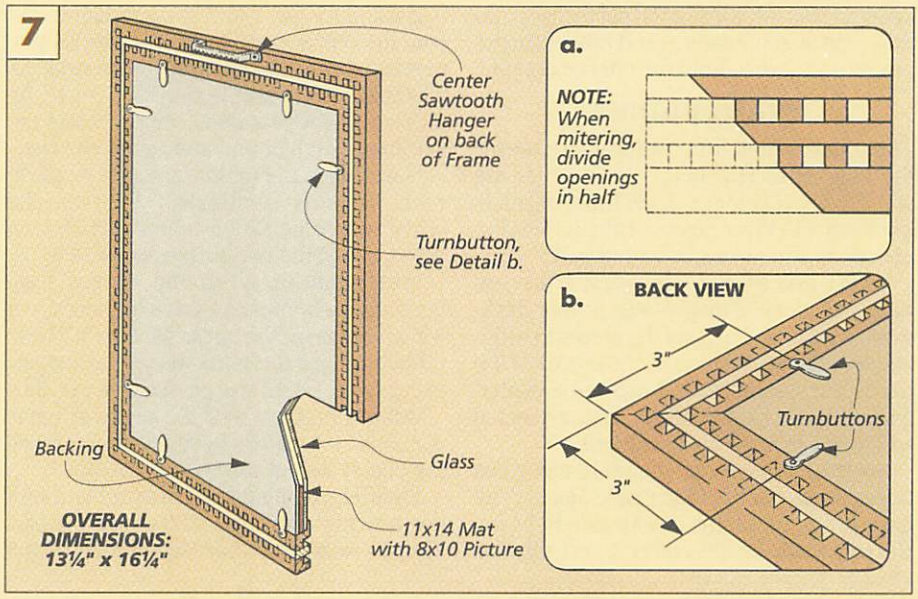

SIMPLE INDEXING JIG

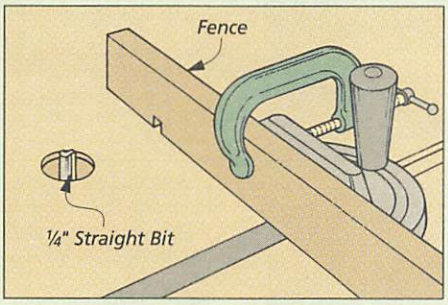

1 *To make this jig, first clamp a fence to the miter gauge. Then rout a 3/16"-high notch in the fence with a ¼" straight bit.*

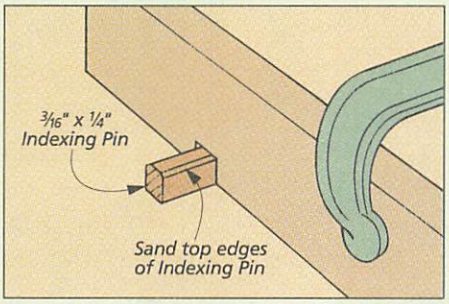

2 *Now, cut an indexing pin to fit the notch. Sand edges so workpiece can be set on and off easily. Then glue pin in place.*

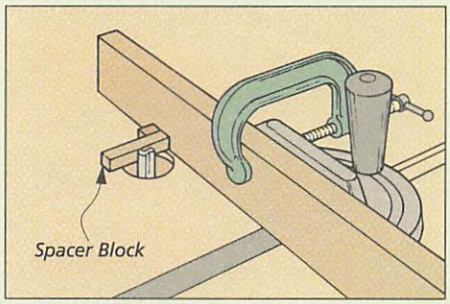

3 *Next, move the fence so the bit is ¼" from the pin. (Use a spacer the same width as the pin.) Then reclamp the fence.*

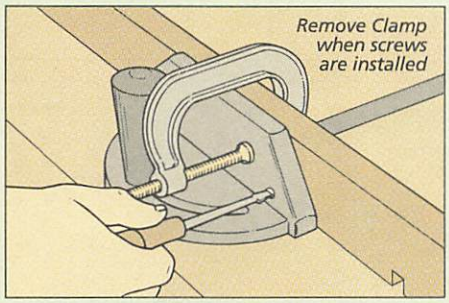

4 *With the fence still clamped in place, drill pilot holes and screw the fence to the miter gauge. Then raise the bit ¼" high.*

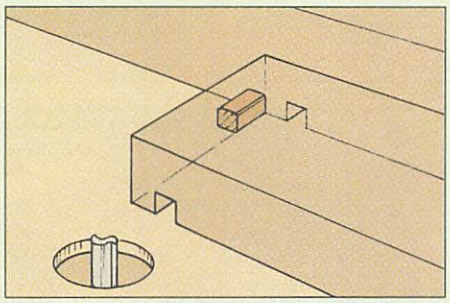

5 *To cut dentils, lay the workpiece face down, keeping it tight against the fence and pin. Cut the first dado (dentil).*

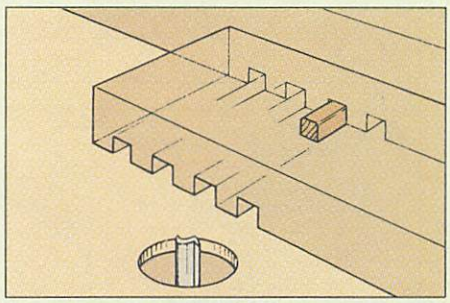

6 *Place the dado (just cut) on the indexing pin and make another pass. Repeat this process along the length of the board.*

ACCENT STRIP PICTURE FRAME

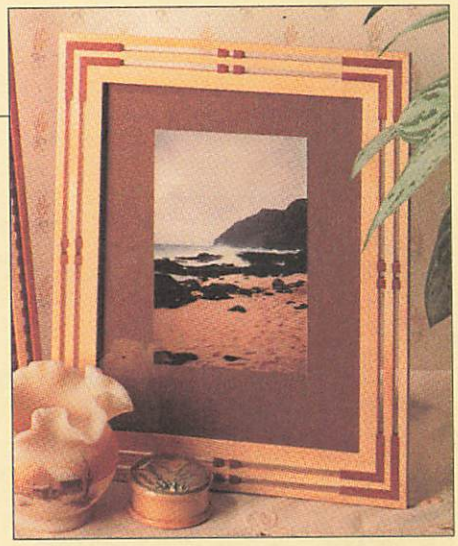

This frame is like a club sandwich. Three pieces of maple act as the bread around thin cherry accent pieces. Like tomatoes, these accent pieces can slide around — especially when glue is added. So the challenge is keeping everything aligned perfectly. To do this, I cut shallow dadoes and rabbets in the pieces of maple to hold the cherry accents.

FRAME BLANKS

The frame is built from two blanks. One for the long sides (13" long). Another for the short sides (11" long). Each frame blank is glued up with three pieces of maple, plus the cherry accent pieces, refer to Fig. 7.

MAPLE PIECES. Start by planing or cutting each piece of maple to its proper thickness, see Fig. 1. Then cut the pieces to width and length. Next, since all the pieces of the frame are symmetrical, I marked a centerline on each. (Many of the measurements will be made from these marks.)

ROUT DADOES. Now, shallow dadoes can be cut on the faces of the maple pieces. The easiest way to do this is with a dado blade. But most dado blades don't cut perfectly flat-bottomed dadoes. So instead, I used the router table and the miter gauge.

Note: To make identical cuts easier, I added an auxiliary fence to the miter gauge and used a stop block, see Fig. 2.

Each piece has two 1/32"-deep dadoes cut near the center, see Fig. 2a. Because they're measured off the center of the workpiece, you only need to set the stop block once. After routing the first dado, simply rotate the workpiece end-for-end and repeat the cut.

Note: Since the middle piece of maple in each blank is sandwiched between the other two, rout dadoes (and rabbets) on *both* faces of the middle pieces, see Fig. 1.

ROUT RABBETS. When the dadoes have been cut in both sets of maple pieces, cut wide rabbets on the ends, see Fig. 3. These rabbets are cut the same way as the dadoes, except with a series of passes, see Fig. 3a.

CHERRY PIECES. With the pieces of maple complete, I made two 1/4"-thick blanks for all the cherry accent pieces, see Fig. 4.

Shop Tip: I ran into a bit of a problem with the accents near the center, see Fig. 5a. They're so small it's hard to tell which is the face and which is the edge. To help keep the faces always pointed in the same direction, I marked across the face of each blank with a pencil, see Fig. 4. Keep the marks on each accent piece face up during assembly.

To begin, cut the accent pieces to fit the center dadoes, see Fig. 5. To do this accurately, I cut a test piece from a piece of scrap. When it fit the dado, I ripped a strip off each blank. Then cut them to length.

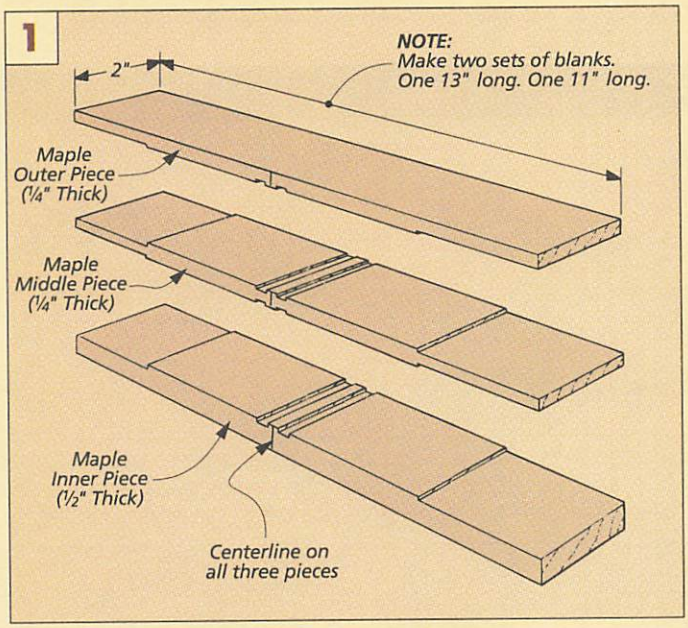

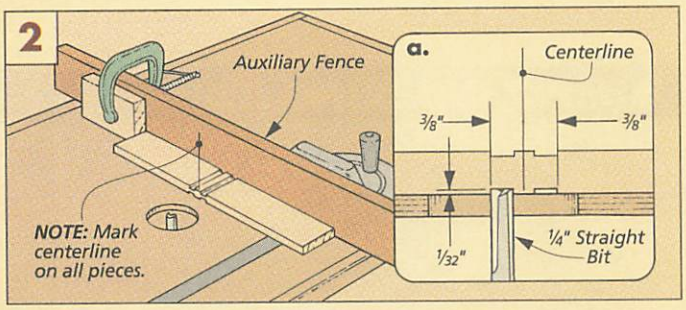

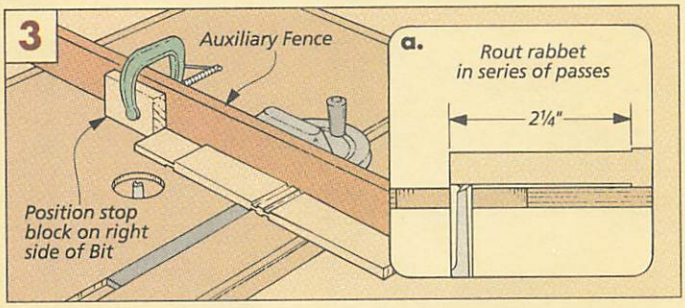

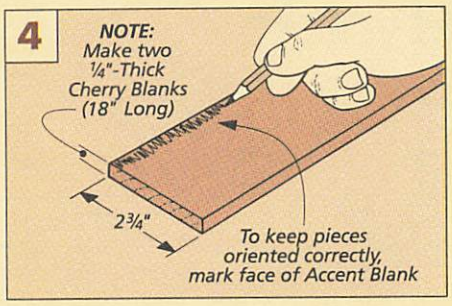

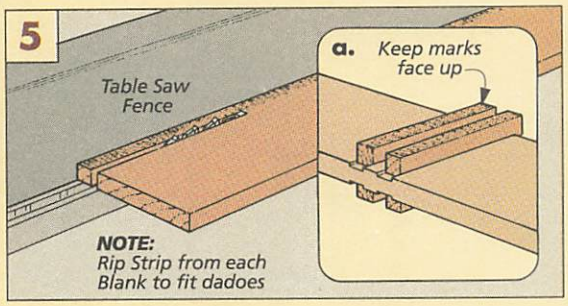

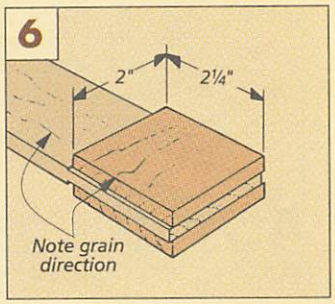

With the leftover pieces of cherry, I cut the accent pieces for the rabbets, see Fig. 6.

ASSEMBLE BLANKS. When all the accent pieces were cut, I glued up the two blanks for the frame, see Fig. 7. But don't use too much glue. It's hard to remove the excess in the tiny spaces around the accent pieces.

Note: I offset all the cherry accent pieces on one side of each frame blank, see Fig. 7a. This way there's one straight edge to set against the fence when ripping, see Fig. 8a.

FRAME PIECES

When the glue is dry, shave one edge of each frame blank on the table saw to get a nice, clean edge, see Fig. 8.

RIP FRAME PIECES. Then rip each blank into three ½"-thick frame pieces, see Fig. 9. (I cut three from each blank so there would be a couple extra pieces — just in case.)

Next, before cutting the miters, I routed a 9/32"-wide rabbet along the back, inside edge of each piece to hold the glass, mat, and backing materials, see Fig. 10. The depth of the rabbet should match the thickness of the materials you're going to use.

FRAME ASSEMBLY

The blanks are now ready to be mitered into a frame, see Fig. 11. These miter cuts aren't typical or easy. Since the pieces are symmetrical, the cuts must be measured from the *center* of each piece, see Fig. 11. Note: This frame is designed to hold a precut 8x10 mat.

ASSEMBLE FRAME. To glue up the frame, first I assembled the pieces into two halves just using hand pressure. Then I joined the halves with a band clamp.

Shop Tip: When gluing end grain to end grain, I use a double-gluing technique to seal the pores of the wood. First, apply glue to both ends of each piece and let it dry. Then add more glue and assemble the joint.

PROP STICK. The frame is almost complete, but it needs something to keep it from falling over. You might be able to find a special backing board. But a prop stick made from scrap works just as well, see Fig. 11b. Cut the stick to fit the opening between the center accent pieces. (Start with an oversize blank. It's much safer when ripping.)

FINISH. Now the picture frame is ready to be finished. For a natural wood look, I applied a couple of coats of wiping varnish (like Royal Finish, see Sources, page 31).

Shop Tip: To cover the tiny openings evenly, you can soak the frame. To do this, you'll need a large container and plenty of wiping varnish. Hang the frame up to dry to allow the varnish to run off.

TURNBUTTONS. Finally, to keep the glass, mat, and backing materials in place, I nailed six turnbuttons to the back, see Fig. 11a. (For Sources, see page 31.) Since the frame pieces are narrow, I predrilled the holes to prevent the brads from splitting the wood.

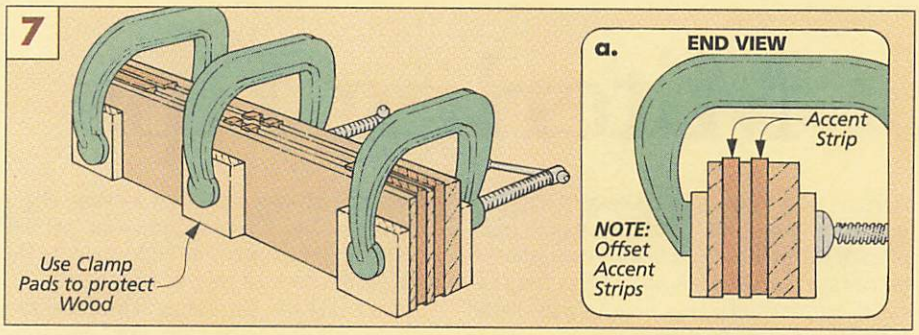

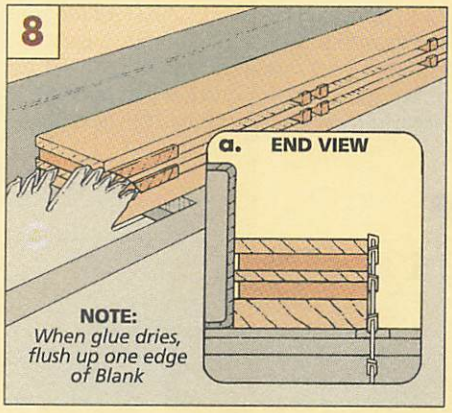

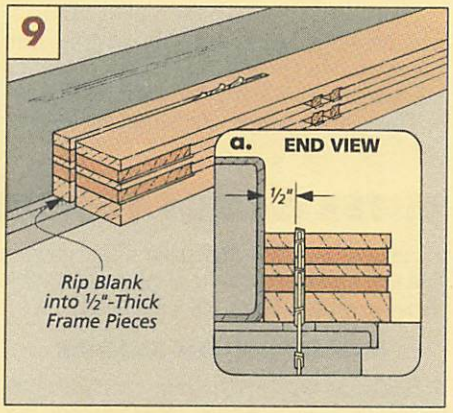

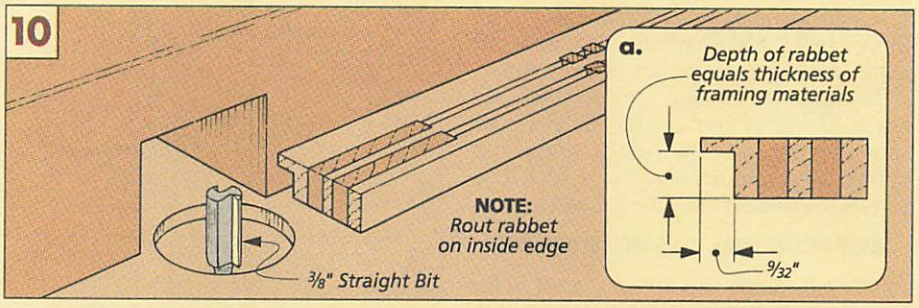

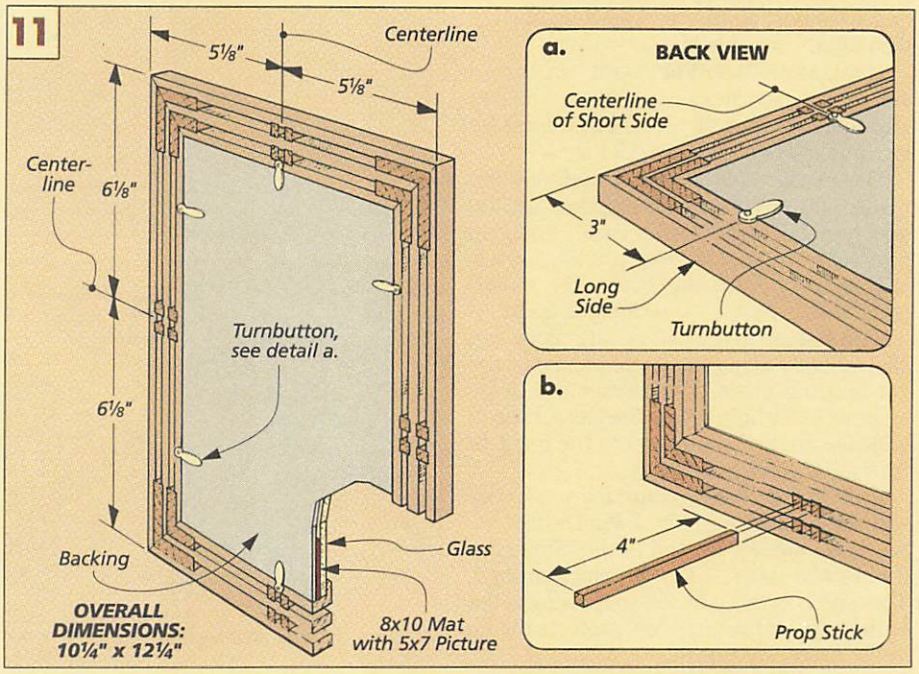

Mitering Tips

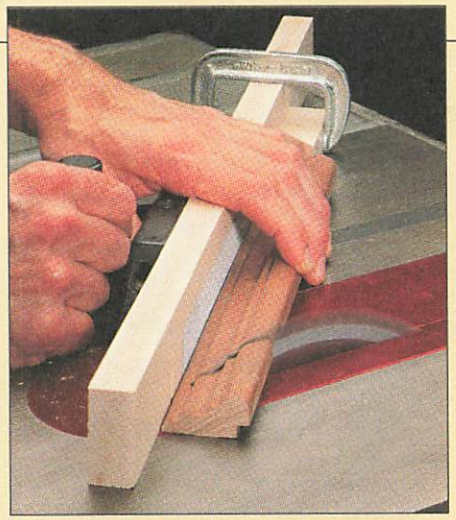

A frame with tight miters is easy to make — in theory. "Just cut a 45° angle on both ends of each workpiece. And make sure opposite pieces are the same length." But, cutting *exact* 45° angles and pieces *precisely* the same length isn't quite so simple.

I suppose if I had a power miter saw with positive stops, laser beams and whistles, the miter wouldn't be a problem. But on my table saw, the joint requires accurate setups.

There are a couple steps that are easy to overlook. I always start with a clean, sharp saw blade. And the blade must be parallel with the miter gauge slots and square to the table. (For more on this, see page 16.)

That's just the beginning. On these two pages, you'll find some other tips I use to get both the exact angle *and* the right length.

One other thing. To eliminate a lot of the set-up time, I came up with a jig to set the miter gauge to 45° quickly and accurately. (See the box at the bottom of the next page.)

MITER GAUGE TUNE-UP

I learned long ago that most miter gauges can use a good tune-up to improve accuracy. When cutting miters, it's a necessity.

MODIFYING THE RUNNER

I start by checking if the runner on the miter gauge fits the slot on the table saw, see Fig. 1. It's surprising how much side-to-side play there can be. And a loose fit can change the angle, ruining the accuracy of the setup.

To widen the runner, I use a punch, see Fig. 2. The punch creates tiny dimples with raised areas. To fit the runner to the slot, dimple it in a number of spots. Note: If it becomes too wide, simply file it down a bit.

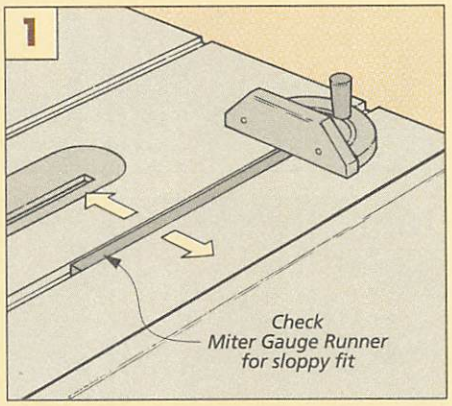

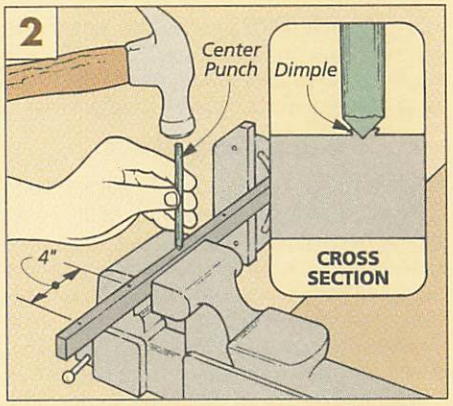

SUPPORTING THE WORKPIECE

Another problem with miter gauges is the face can be too small. It might not give adequate support as the workpiece is pushed through the saw blade.

AUXILIARY FENCE. For more support, I add an auxiliary fence, see Fig. 3. You can use solid wood or plywood, but it must be straight and of consistent thickness.

The auxiliary fence I use extends past the blade. This way, it reduces chipout. And the kerf from the blade can help when lining up a cut. One caution: If the face of the fence is angled away from the blade, the cut-off piece will be trapped and can kick back.

SANDPAPER. With miters, the piece can slide slightly along the angled fence as the cut is being made. This prevents a clean, square cut. To help secure the piece, I attach adhesive-backed sandpaper to the fence to "grab" the piece, see Fig. 3.

STOP BLOCK. I also secure the workpiece with a stop block, see Fig. 4. For the first miter, I use the square end of the block. For the second miter, I flip the block around. This end is mitered to 45°, so it contacts the entire edge of the piece and protects the tip of the miter, see Fig. 4a.

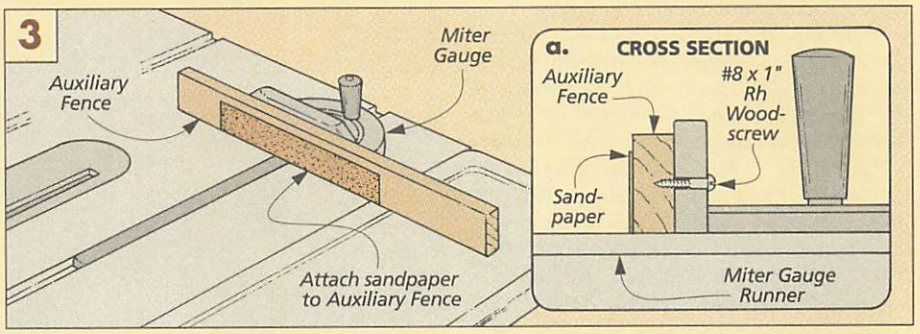

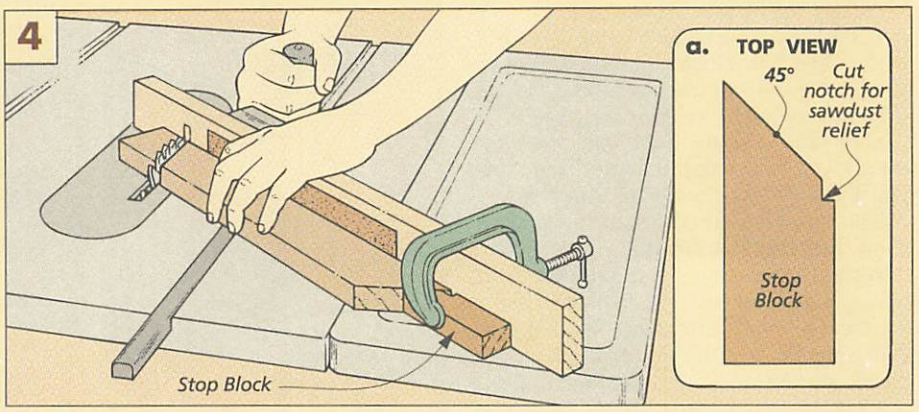

SETTING THE MITER GAUGE

After the miter gauge is tuned up, I set the angle. Unfortunately, this can involve quite a bit of trial and error.

SET ANGLE. To minimize any hassle, I don't use the degree markings on the gauge to set the angle — the lines are too thick.

Instead, I use an adjustable triangle with hairline markings, see Fig. 5. (They're available at art supply stores.) When using an adjustable triangle, be sure it's not resting against the teeth on the blade. This can change the angle significantly.

CHECK ANGLE. After the angle is set, don't assume that it's perfect. Test it by mitering a couple of scraps and checking them for square, see Fig. 6. (Note: The wider the test piece, the easier it is to see any error.)

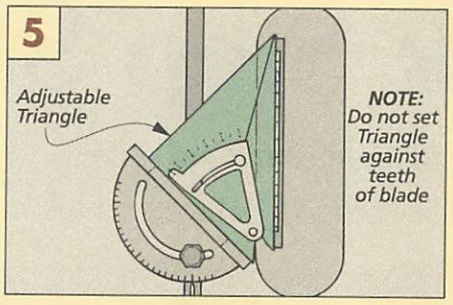

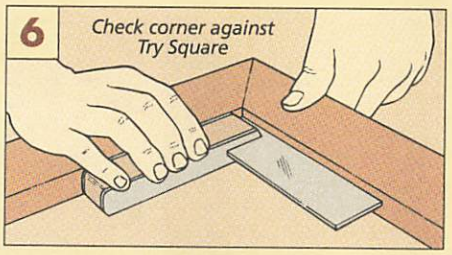

ADJUSTING THE ANGLE

You probably won't get a perfect 45° angle the first time. And figuring out which way to adjust the miter gauge requires some mental gymnastics. It's easy to move it the wrong way and make the gap even wider.

MARK JOINT. To determine which way to rotate the miter gauge, I mark the pieces where the joint is touching, see details in Fig. 7. Then, I adjust the miter gauge so either the toe or heel is trimmed, see Fig. 7.

Once the miter gauge is close to 45°, it's very easy to over-adjust and end up with the opposite error. If the angle is just shy of being perfect, I "tweak" the miter gauge using a shim, see photo box at right.

Like I said, setting the angle requires a lot of trial and error. To get around this the next time, I built a simple set-up jig, see below.

CARD SHIM

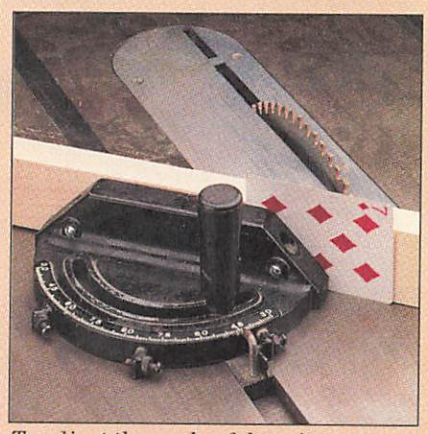

To adjust the angle of the miter gauge a hair, loosen one of the screws that holds the auxiliary fence in place. Then slip a playing card between the fence and the miter gauge. Now retighten the screw.

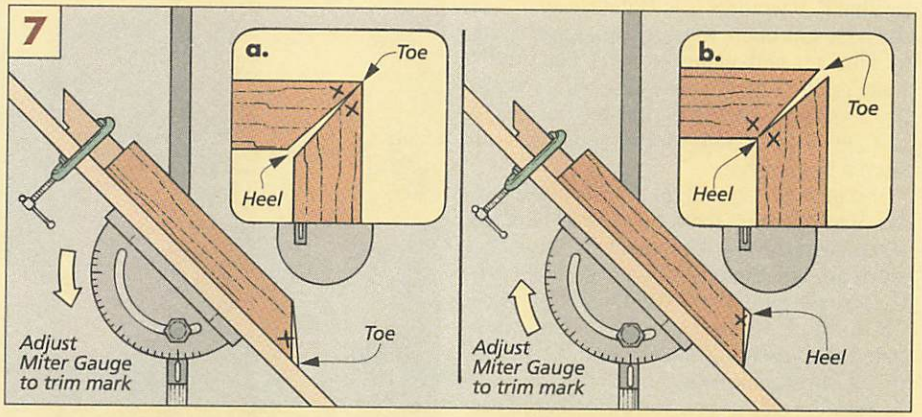

MITER GAUGE SET-UP JIG

Instead of resetting and readjusting the miter gauge each time I want to cut miters, I built a jig to set the miter gauge to exactly 45° every time. The jig is simple. But it requires very accurate construction.

CLEAT. The jig consists of a base and a triangular cleat, see Fig. 1. First, cut an 8"-square piece of plywood for the cleat. (Check that the corners are 90°.)

Now, set your miter gauge to *exactly* 45°, as shown above. Then use the gauge to cut the cleat to form a triangle.

BASE. Next, cut the plywood base and rip two grooves in it, see Fig. 2. These should be just wide and deep enough to hold the runner on your miter gauge.

Shop Note: The grooves must be parallel. So when cutting them, keep the same edge of the base against the fence.

ASSEMBLY. Now, with the miter gauge still set at 45°, set the miter gauge runner in one of the grooves, see Fig. 3. Clamp the cleat flush against the miter gauge. Then, screw the cleat to the base.

Because the corner of the cleat is 90°, positioning it 45° to the groove on one side will automatically set the other side at 45°.

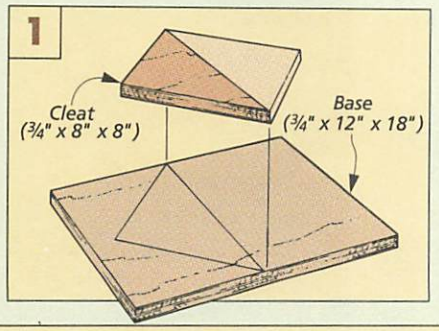

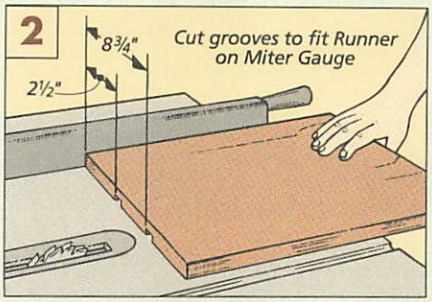

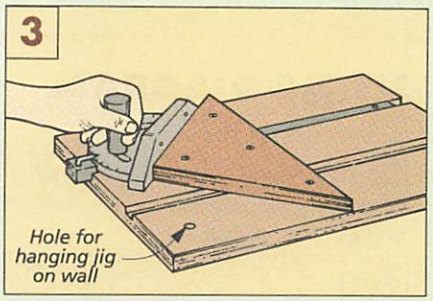

Oak Step Stool

One way to build the side panels for this stool is to glue up the panels first and then cut the stair-stepped profiles. I took a different approach.

The biggest challenge to building this Oak Step Stool was figuring out a way to do it without ending up with a lot of waste. My first thought was to lay out both side panels on *one* oversized, glued-up blank (with the side panel profiles fitting together like two large pieces from a jigsaw puzzle). Then I was going to rough out both side panels with a sabre saw. And cut the final profiles with a band saw.

After thinking about this, I decided against it. It would work. But it really wasn't the best approach. It would be a large blank to glue up and plane or sand flat. And I wasn't interested in wrestling with a workpiece this size on the band saw. Besides, it can be difficult following layout lines on such a large piece.

So instead, I glued up two separate panels. Each built up from three boards of different lengths — with most of the detail work already done. (I cut an S-shaped profile on each board before gluing them up, refer to Fig. 2 on the next page.) This eliminated the wrestling match. And it reduced the waste significantly.

After the side panels were glued up, it was just a matter of trimming them to length, cutting an arch to create feet, and angling the back edge of each panel so the back of the stool wouldn't bump into a wall.

Once the sides were complete, all I had to do was cut the treads, handle, and stretcher.

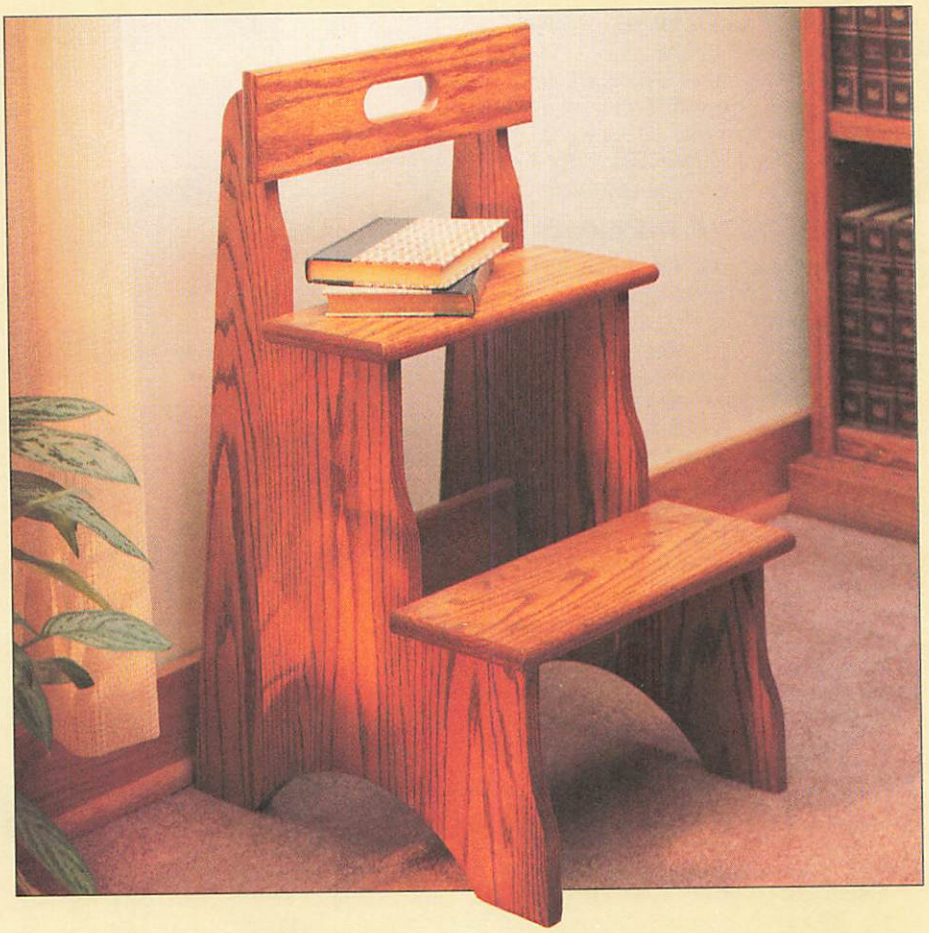

MATERIALS

A	Tall Side Pieces (2)	¾ x 6 - 28 rgh.	
B	Middle Side Pieces (2)	¾ x 6 - 19 rgh.	
C	Short Side Pieces (2)	¾ x 6 -10 rgh.	
D	Handle (1)	¾ x 4 -16	
E	Treads (2)	¾ x 6 -16	
F	Stretcher (1)	¾ x 4 -12½	

- (16) #8 x 1½" Fh Woodscrews
- (16) ⅜" Face Grain Plugs

CUTTING DIAGRAM

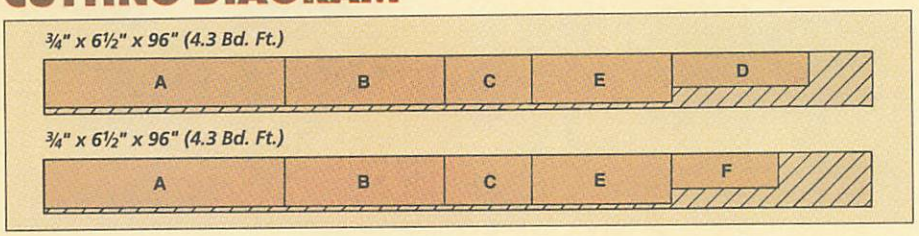

TEMPLATE

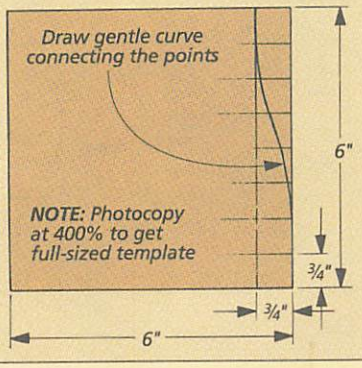

SIDE PANELS

To build the stair-stepped sides, I began by cutting the three side pieces **(A, B, C)** for each panel to *finished* width and *rough* length, see Fig. 1. (I used ¾"-thick red oak for all the parts of this project.)

After cutting the pieces to rough length, arrange and mark them as they will appear in the finished panel.

PROFILE WORK. One interesting design feature of this stool is the S-shaped profile along the front edge of the sides. I cut this profile in each side piece *before* gluing the pieces together into the panels.

To ensure that each profile would look the same, I made a template from ⅛" Masonite, see Template on previous page.

The easiest way to position the template is to draw alignment marks on each board, see Fig. 1. Note: The location of the alignment marks varies from board to board.

Next, trace the profile on each piece, see Fig. 1a. Then cut and sand them smooth. But as you're sanding, keep this in mind. Only sand within 1" of the alignment mark, not below it. The edge of the board below the line will become part of the joint line in the panel. If you sand in this area, you may not end up with a tight glue joint.

GLUE-UP. Now the two side panels are ready to be glued up.

There really aren't any tricks to gluing up the side panels — even though they look a little strange. Just align the top end of the medium-length and short-length side pieces to the alignment marks, see Fig. 2.

Then glue-up each panel with the clamps positioned squarely on the straight sections of the pieces — not on the curved profile.

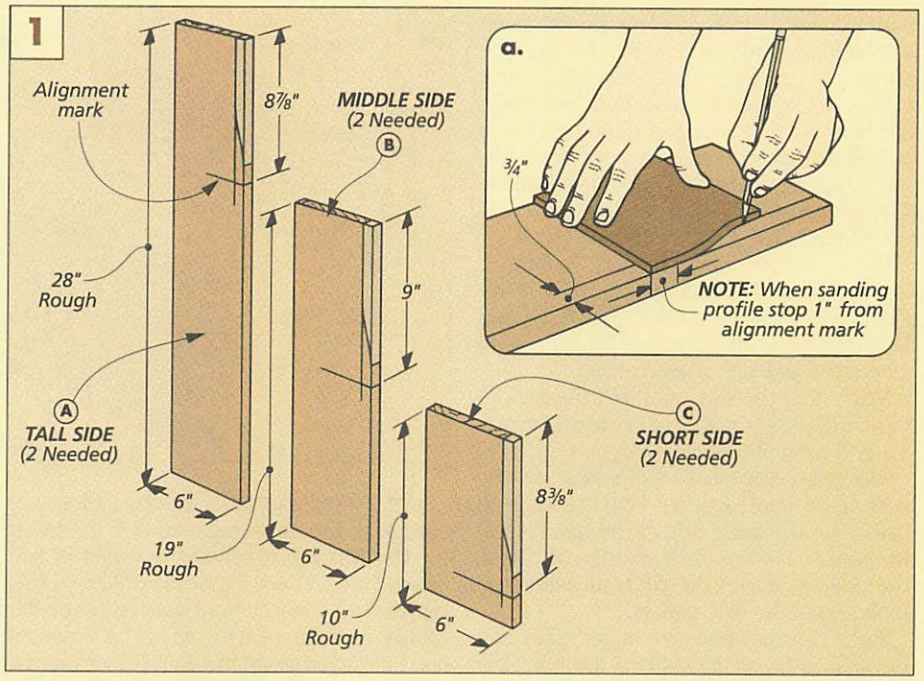

After the panels have been allowed to dry, cut them to finished length, cutting the bottom edge only. Then sand them smooth.

STRETCHER HOLES. The next step is to lay out and drill counterbored holes for a stretcher that will be added later, see Fig. 2 (and refer to Fig. 10 on page 27). I did this now while there was still a squared-up edge to measure off of. (A sloped back is cut later along the back edge, see Fig. 3.)

Note: When drilling the holes, the counterbores are drilled on the *outside* face of each panel, making the panels mirror images of each other, see Fig. 2a.

Then lay out alignment lines for the stretcher, see Fig. 3a.

ARCHED FEET & SLOPING BACK. Once the holes are drilled, lay out and cut an arc to create feet. To do this, I made a beam compass. And to keep it level, I butted an extension block up against the bottom edge of the panel, see Fig. 3.

Now, the sloping back as well as a radius on the top corner can be laid out and cut.

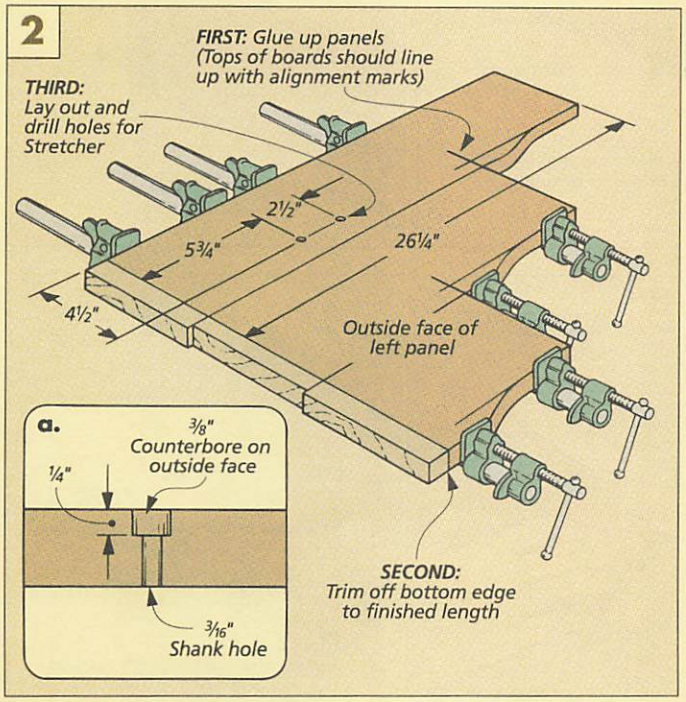

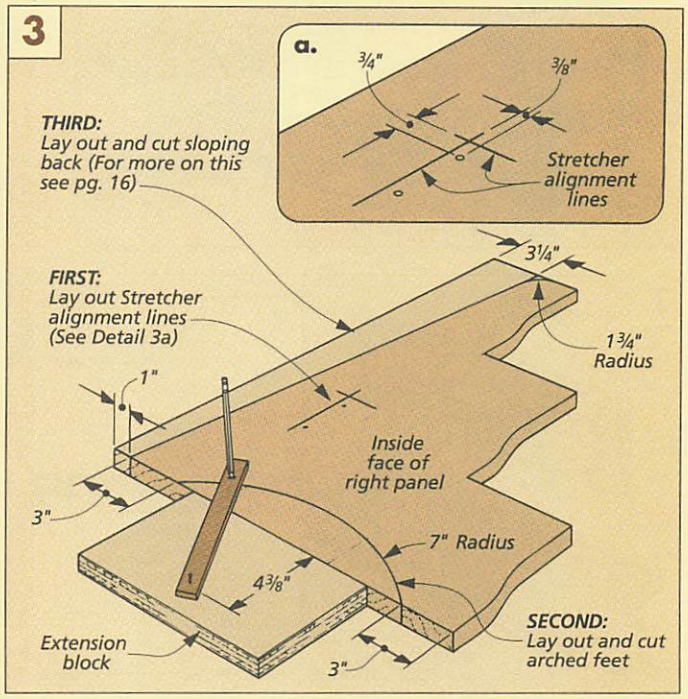

HANDLE & TREADS

With the side panels complete, the next step is to build a handle and two treads. All three pieces are similar. There are holes for screws so each piece can be attached to the side panels. And stopped dadoes to help lock all the parts together during assembly.

HANDLE & TREADS. To make the **handle (D)** and **treads (E)**, first cut three pieces of stock to finished dimensions, see Fig. 4.

Then, cut a slot in the handle. To do this, I drilled a series of overlapping holes using a 1¼"-dia. Forstner bit, see Fig. 5. (If you don't own a 1¼"-dia. Forstner bit, you could cut out the slot with a sabre saw.)

Next, sand the slot smooth. I used a ½"-dia. drum sander mounted in the drill press. (Later, I rounded over the edges.)

STOPPED DADOES. To help lock all the parts of the stool together, I cut two stopped dadoes on the back side of the handle and the bottom side of each tread, see Fig. 6. The dadoes are cut to width to match the thickness of the side panels.

Since I already had an auxiliary fence on the drill press, I decided to use the drill press and Forstner bit to cut the stopped dadoes as well.

Shop Note: You could use a ¾"-dia. Forstner bit here, but after my panels were sanded, they ended up slightly less than ¾" thick. So I used a ½"-dia. Forstner bit, cleaning out each dado with two rows of holes.

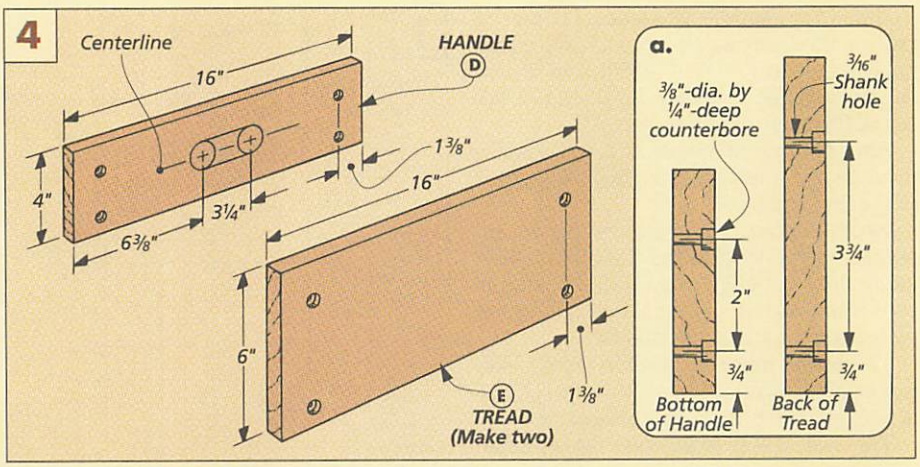

HOLES FOR SCREWS. After the dadoes are complete, the next step is to drill the holes for the screws. I drilled the holes in two steps. Note: These holes are different distances from the front and back edges on the treads. And different distances between top and bottom edges of the handle, see Fig. 4a.

First, drill counterbores for plugs, centered over the dadoes, see Fig. 6. Shop Note: Since you're drilling blind, it's a good idea to draw an alignment line around the workpiece, using the dado as a reference.

Once the counterbores are drilled, drill a shank hole for a screw. Use the spur mark left in the counterbore to center the bit.

BULLNOSE EDGES. Now a bullnose profile can be routed on the treads and handle. To do this, I used the router table with a ½"-dia. round-over bit, see Figs. 7 and 7a.

Note: Only three edges on each piece get routed. The back edge of the treads remains square so they can butt up tight against the sides. And the bottom edge of the handle isn't routed either because I wanted it to look similar to the treads.

Once the profiles are routed, do the same on the inside of the handle (using the same setup), see Fig. 8.

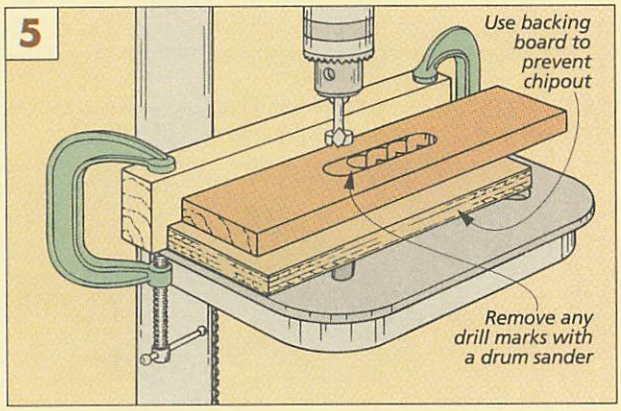

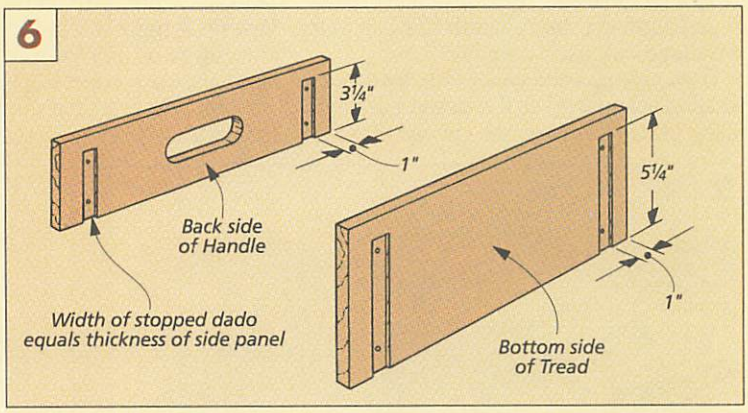

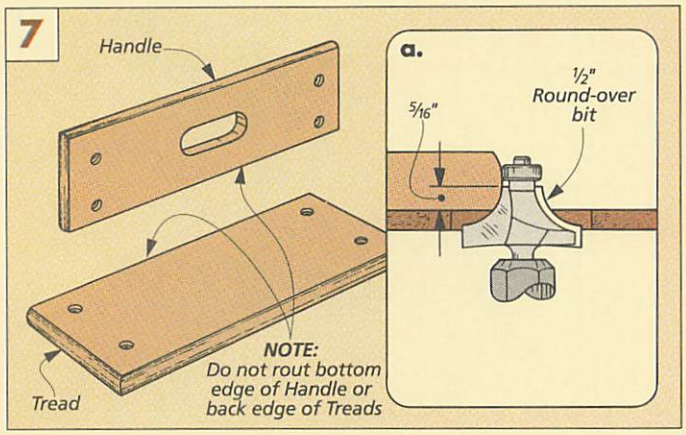

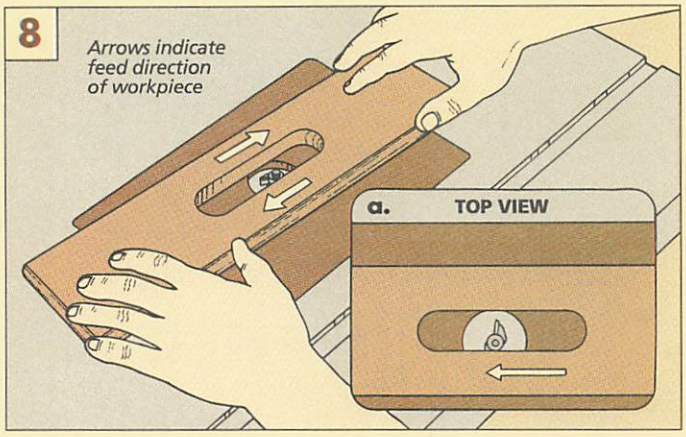

STRETCHER & ASSEMBLY

The last part of the stool to make is the stretcher. But before it's cut to size, I assembled the other parts. This way, the stretcher can be cut to fit the stool.

ASSEMBLY. There are a couple of important things to check for when assembling the stool. First, the backs of the treads must be tight against the side panels. And second, the dadoes must be fully seated on the side panels, see Fig. 9.

To do this, you may want to jury-rig some kind of clamping system to hold the pieces together while you're drilling and screwing. But it might be easier, and quicker, for you to find someone to give you a hand. (And I don't mean a round of applause.)

STRETCHER. After you've screwed the treads (E) and handle (D) to the side panels, the stool can be measured for the stretcher.

The key to cutting the stretcher to the correct length is to measure between the side panels near the handle, see Fig. 10. (If you measure anywhere else and the sides aren't perfectly parallel, you will end up cutting the stretcher to the wrong length.)

After the **stretcher (F)** is cut to size, rout a bullnose profile along the top edge, refer to Fig. 7a on the previous page.

Then place the stretcher between the side panels. The piece must fit within the layout lines that were drawn earlier, refer to Fig. 3 on page 25.

Once the stretcher is positioned, add a clamp across the back of the stool to hold the stretcher in place, see Fig. 10. Recheck the stretcher's alignment, just to be sure. Then, drill and screw the stretcher to the side panels.

Finally, to complete the project, plug all the screw holes with 3/8"-dia. plugs, see box at right. Then trim the plugs flush. To do this, I use a sharp chisel, working my way around each plug. Now the Oak Step Stool is ready for a finish, see box below.

SCREW HOLE PLUGS

A face grain plug (left) will be nearly invisible once the project is stained. An end grain plug (right), will soak up more stain and look darker than the surrounding wood.

9

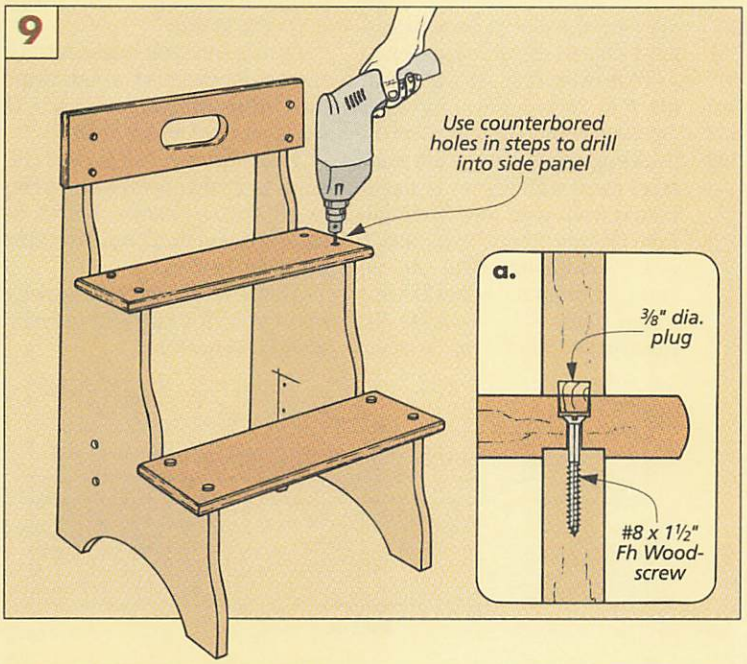

10

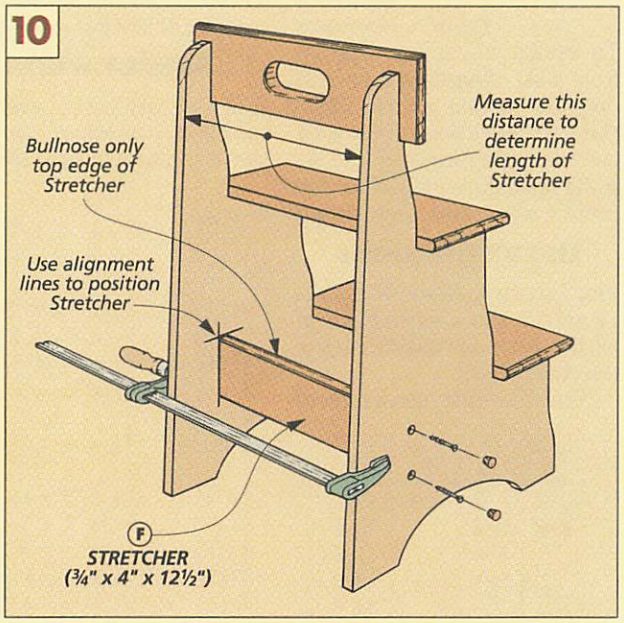

FINISHING THE OAK STEP STOOL

Red oak looks good with a natural finish. But I also like how it looks with a stain.

STAINING. Before staining the stool, I sanded it with 180-grit sandpaper. Then, to bring out the grain, I stained the entire stool with two coats of Minwax Early American, see Sources on page 31.

After the first coat is wiped on, allow it to sit for about 15 minutes. This gives the stain a chance to soak into the wood. Then, with a clean rag lightly dampened with mineral spirits, redistribute the stain from the darker areas to the lighter areas.

After the first coat of stain dries (I allowed it to dry 24 hours), wipe on the second coat in the same manner.

FINISH COAT. With the second coat of stain thoroughly dry, I brushed on a coat of polyurethane (clear satin). The following day, I lightly sanded the entire stool with 600-grit sandpaper before brushing on another coat of polyurethane.

Saftey Note: When cleaning this Oak Step Stool, avoid using furniture polish or furniture wax. You don't want the treads to be slippery when you're standing on the stool.

Anytime you apply a stain, wipe (or brush) with the grain of the wood. And if you want a richer color, apply two coats.

Talking Shop

MAKING CUTTING DIAGRAMS

I'm planning to build the Secret Box from issue No. 83 of Woodsmith. *You say in the article on building the project that there's only a few board feet of hardwood needed. Since you don't show a cutting diagram, I was wondering what's the best way to draw one.*

The parts of the box are ¼", ⅜", ½", and ¾" thick. What's the most efficient way to get all of these parts from one board?

Jim Simon
Omaha, Nebraska

To create a cutting diagram from a list of parts, you have to do some sorting and shuffling. (Like sorting a deck of cards by suit.) I do it in three steps. (This is the procedure I follow for any project, not just the Secret Box.)

LIST BY THICKNESS

First, go through the Materials List and make a separate list of all the parts by thickness, see the chart below.

Note: The first measurement given in a *Woodsmith* Materials List is the thickness. This is always followed by the width and then the length.

¾	½	⅜	¼
J-2	A-2	L-1	D-1
K-2	B-2		E-2
	F-4		G-2
	N-1		H-2
			M -1

In one column write down the name — or letter designation — of the thickest (¾"-thick) parts, and the number of each part needed. (In the example shown, you need two "J"s.)

In a second column, record the ½"-thick parts. Then in the next column the ⅜"-thick parts, and so on until all the parts (except the Masonite) are listed.

SORT BY WIDTH

When all the parts have been sorted by thickness, the next step is to list them again, but this time by width (also write down the length). Note: This step "shuffles" the original Materials List by thickness of the parts, see below, left.

J (2)	¾ x ½ x 8
K (2)	¾ x ½ x 5
A (2)	½ x ¾ x 8
B (2)	½ x ¾ x 5
N (1)	½ x ½ x 3
F (4)	½ x ½ x 1½
L (1)	⅜ x 4 x 7
M (1)	¼ x 3 x 6
G (2)	¼ x 2 x 7
H (2)	¼ x 2 x 4
D (1)	¼ x 5/16 x 6 3/16
E (2)	¼ x 5/16 x 3¾

This step makes it easier to lay out the cutting diagram and cut the pieces into groups of similar pieces later. Note: I start with the thickest pieces and list these from widest to narrowest.

LAY OUT DIAGRAM

The last thing to do is begin drawing the pieces on an imaginary board, see drawing below.

To do this, first draw a rectangle that represents a ¾"-thick piece of wood. Then draw in the thickest parts along one edge and label them with the letter designation from your new Materials List. Do this for one thickness at a time until all parts are accounted for (or the board fills up).

The idea is to separate the imaginary board (or boards) into sections with common cut lines. So when you *do* begin cutting, it should take only a couple rips and a couple crosscuts to separate the board into workable sections. And each section will contain pieces all the same desired thickness.

BEFORE CUTTING. There's a couple more things to remember before you start cutting up any boards. First, draw the cutting diagram so the length of the parts run the length of the board (*with* the grain).

And, before you begin cutting the actual piece of wood, draw the cutting diagram on it too. (I use a piece of white chalk.)

This way, you can lay out the parts to avoid any defects in the wood, such as knots, checks, or sapwood you don't want to show up in the project.

That's the reason I always buy extra wood for a project (usually about 20% more).

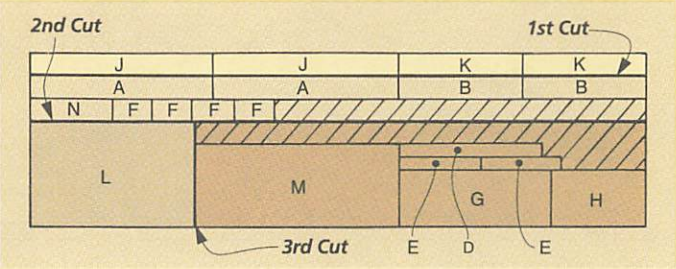

MAINTAINING OIL FINISHES

In the past, I've used oil finishes on several of my furniture projects. But now they look worn and dull. And in spots, it looks as if there is no finish on the wood at all. What can I do to restore or brighten up the finish?

Benjamin A. McComb
Rockford, Illinois

The real advantage of oil finishes is they're easy to apply. But the downside is they often require regular maintenance.

An oil finish leaves a thinner layer of protection than most other finishes. That's not to say that oil finishes don't protect the wood at all. It just doesn't take much to wear them down.

MAINTENANCE. Fortunately, oils are easy to maintain. Just add a fresh coat. You don't need to strip or sand the old finish. You don't even need the exact same finish. Any "oil" finish will do. (Oil finishes include natural oils, such as linseed or tung oils, oil/varnish blends, wiping varnishes, and polymerized oils.)

CLEAN. First, give the piece a gentle cleaning with mineral spirits and fine steel wool. This not only takes care of the dirt, it also removes any wax or furniture polishes on the wood.

If there are any scratches, a fresh coat of oil usually hides them. The scratch is still there. It's just blended in. Of course, dents and gouges will probably require a little more attention.

ADD FRESH COAT. After cleaning, wipe on a fresh coat of oil. Just brush or wipe a heavy coat on the project. Let it sit a few minutes, making sure the surface stays wet. Then wipe off the excess and let it cure overnight.

Add another coat (or coats) any time the finish begins to look "dry" or worn.

G.F.C.I. EXTENSION CORD

For safety, especially when working around wet conditions, this extension cord has a ground fault protected receptacle.

Power tools aren't used only in the shop. Sometimes I need to take a tool to another work site. Last summer, for instance, several *Woodsmith* offices suffered water damage from the floods, so there was clean-up work to do.

What I wanted was an extension cord for a wet-dry vacuum and a power washer. A ground-fault protected cord would be safest. But an extension cord with a built-in GFCI (ground fault circuit interrupter) receptacle can be hard to find or expensive to buy.

So I gathered all the parts to make my own GFCI extension cord. Note: This is one of those projects that's best to complete *before* it's needed.

WHAT IS A GFCI? First, let me take a minute to explain what a ground fault protected circuit is. It's one that's able to detect differences in current coming into and going out of an electric tool. If the current into and out of the tool isn't the same, it means there's a short somewhere. This can be a dangerous situation if you're operating the tool on a damp floor — your body could become part of the circuit and carry the leaking (and possibly deadly) current to the ground.

That's what's called a ground fault. A GFCI protected circuit will detect such a fault and interrupt the flow of current before it can hurt you.

OUTDOOR EXTENSION CORD. To make a GFCI extension cord, I started by gathering up all the parts from an electrical supply store. Note: Most of the parts are available from local hardware stores, but I wanted to use commercial grade parts for extra durability when used outdoors. (Altogether I spent about $40 on the parts for this cord. See page 31 for more details.)

RECEPTACLE & BOX. The safety part of the extension cord is the GFCI receptacle. The one I used is rated for 120 volts at 15 amps.

The receptacle is mounted in an outdoor-type (aluminum) box, see photo. (Hard plastic boxes are also available.)

CORD. Besides the safety feature, what I like best about this extension cord is the heavy-duty cable. It's a 14-gauge, 3-conductor cable wrapped with a durable, bright yellow jacket. This is tougher than the 14-3 cable you're likely to find at a hardware store. And it's more expensive, too. But for a short length (the cord I made is 16-feet long) it's only a few dollars more.

CONNECTOR & PLUG. On one end of the cable is an aluminum connector that joins the cable to the receptacle box. This grabs onto the cord so it can't easily be pulled out of the box. It makes a water-tight connection, too.

At the other end of the cable is the plug. Here again, I chose a heavy-duty component. It's a three-prong plug with a connector that prevents the cord from being pulled out of the plug.

BUYING LUMBER THROUGH THE NEWSPAPER

Occasionally, I'll run across an ad in the classifieds for hardwood lumber. Usually it's oak or walnut that's been stored for a number of years in someone's barn or shed. The thing is, it's only about a buck a board foot. Is this a good deal?

Randy Pierce
Galveston, Texas

A barn can be like an old gold mine. You either dig up gold or dirt. I've found some beautiful wood through the classifieds. (I've used it to build some of the projects that have appeared in *Woodsmith*.) But there's a lot of "firewood" that's advertised too. There aren't any guarantees.

Either way, be prepared to spend more time and energy than if you were to go to a lumberyard or woodworking store.

Before making any trip, I would try to get as much information as possible over the phone. Here are two questions I would start with.

How has the wood been milled and dried?

Actually, I'm not really concerned with the specific tool used to mill the wood. Or the specific method used to dry it. Asking these questions helps me get a feel for how much care the sawyer took in milling and drying the wood.

How the wood was dried is especially important. If dried properly, there shouldn't be a lot of rot, sticker marks, split ends, or severe bowing and cupping.

Also, if the wood has been air-dried, you may need to stack and store the wood in your house or garage until the drying process is complete.

Note: Later, if you do decide to go see the wood, take a moisture meter with you to check the moisture content of the wood. (For sources, see page 31.)

The more you know about milling and drying the better off you'll be. Two helpful books are: *Understanding Wood*, by Bruce Hoadley, and *On Wood and How to Dry It* from the *Fine Woodworking On...* series. (For sources, see page 31.)

Can I pick and choose just the boards I want?

Lumber stored in someone's shed probably hasn't been sorted or graded professionally. There may be furniture-quality wood right next to boards you couldn't build a pallet with.

So you need to make sure you're comparing "apples to apples" when comparing this lumber to the lumber available at a retail store. The wood may not be as much of a bargain as you think. If you're able to pick and choose, you can be your own "grader." Otherwise, you may end up paying for firewood.

Then, if you get satisfactory answers to these questions, go and see for yourself. But remember, "all that glitters..."

DEAR WOODSMITH...

Join the conversation — that's what Talking Shop is all about. A friendly chat about new products, wood, finishing tips, and shop safety.

But we also look forward to opening our mail. Especially when it contains interesting — or challenging — questions from readers. Send your questions to *Woodsmith*, Talking Shop, 2200 Grand Avenue, Des Moines, Iowa 50312. (FAX 515–282–6741.)

Gouge Grinding Jig

When sharpening the bevel on my turning gouges, I generally use my bench grinder with an aluminum-oxide wheel. And I'll be the first to admit that the free-hand technique I've used is probably less than ideal.

Maintaining the bevel angle on a gouge, while rolling the bevel across the wheel, is just about impossible. I'm sure there have been times when I've ground away too much material, or altered a bevel or two.

So when I received a photo of this jig from **Harry DeFuria**, of Livingston, New Jersey, it looked like it might solve my problem. Harry's jig can accommodate most turning gouges—without *unintentionally* altering the bevel angle.

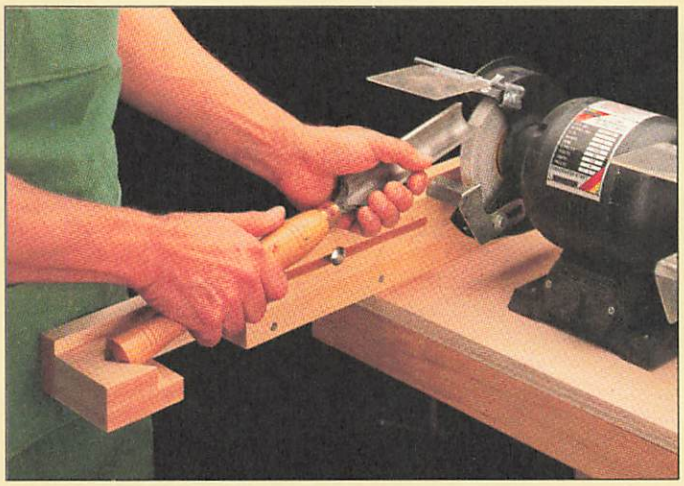

FEATURE YOUR JIG

If you've built an *original* jig and would like to see it featured on this page, send your idea to *Woodsmith*, Reader's Jig, 2200 Grand Avenue, Des Moines, IA 50312.

If we publish it, we will send you $100 and a complete set of *Woodsmith* back issues, with binders. (This set retails for over $300.) Include a sketch (or photo) of your jig and an explanation of how it's used. And *please* include a daytime phone number.

This jig can be set up quickly. But best of all, it allows you to check your progress during the grinding process without having to worry about placing the gouge back on the wheel at the proper angle. The jig automatically maintains the angle.

THE PARTS. A **support arm (A)**, with a **handle stop (B)** and **rest (C)**, are used to support the tool against the wheel, see Fig. 1. An **arm guide (D),** with a groove cut on one side, holds the arm in place. And to mount the jig to the workbench, the guide (D) is screwed to a **base (E)**.

SET-UP. To set up the jig, I placed it on the left-hand side of my bench grinder since that's where I keep the wheel used for sharpening my gouges, see photo. If your grinder is set up differently, you may have to build a mirror image of the jig shown here.

When positioning the jig, it should be parallel to the grinding wheel, see Fig. 2. And the V-notch in the handle stop must be straight out from the face of the wheel.

Next, with the grinder turned *off*, place the gouge on the handle rest. Then adjust the support arm so the bevel rests flat against the wheel. Once the arm is in position, tighten the wing nuts.

USING THE JIG. After the jig is set up, it's just a matter of turning on the grinder and lowering the gouge onto the wheel.

Once the bevel touches the grinding wheel, begin sweeping the bevel back and forth across the wheel, rolling towards the outside edges of the wheel between sweeps, see Fig. 3. Note: As you're sweeping across the wheel, keep the gouge rolling. If it's kept in one place too long, you may end up heating up the gouge and taking the temper out of the metal.

Also, check your progress often. What you're trying to get is a smooth, consistent bevel all the way around the gouge.

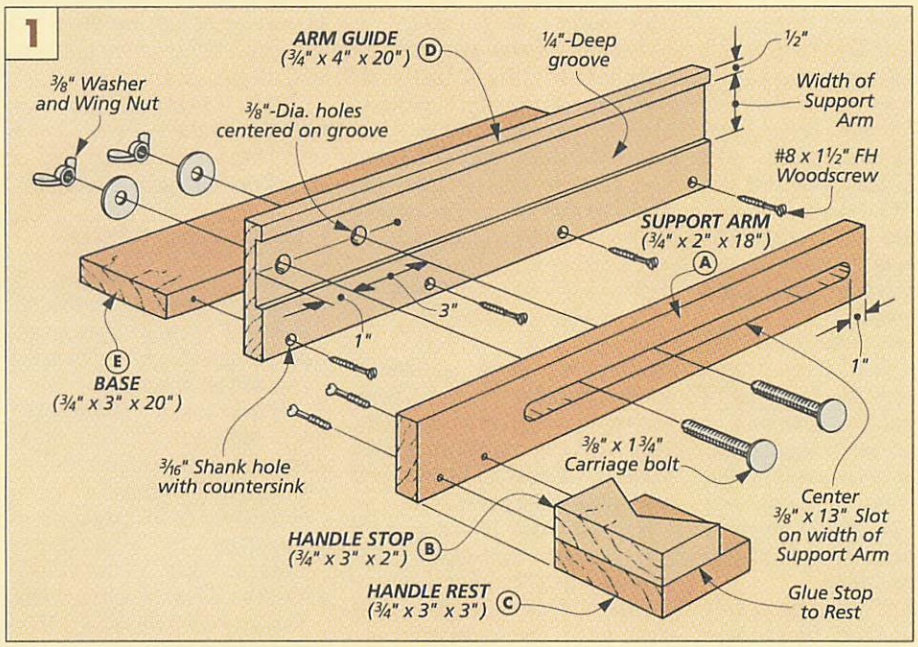

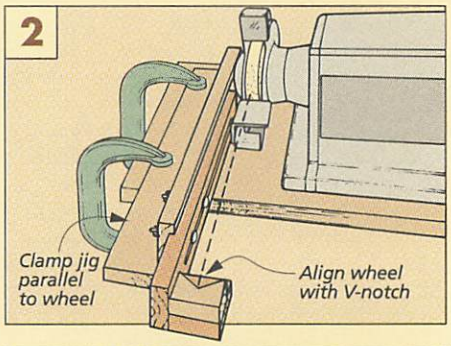

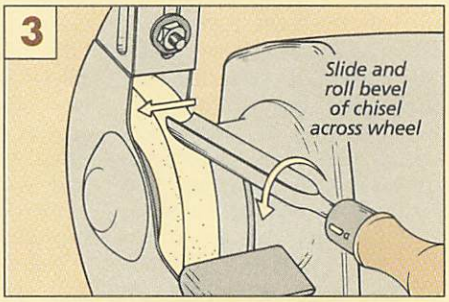

Sources

STAND-UP DESK

For the Stand-up Desk, *Woodsmith Project Supplies* is offering a kit that includes the drawer knobs and woodscrews. The solid brass knobs are about 1" in diameter for the larger drawers and around 9/16" for the smaller drawers. (For similar knobs, see Mail Order Sources below.)

W92-792-100 Stand-up Desk Hardware Kit $17.95

ROUTER BITS. To cut the mortises in the legs of the Stand-up Desk, I used a 1/4" spiral end mill bit. (These router bits are often called upcut spiral cutter bits, see sources below.) To make the dovetail mortise and tenon joint, described on page 14, I used a 1/2" dovetail bit.

Woodsmith Project Supplies is offering a solid carbide end mill bit as well as a carbide-tipped dovetail bit.

W92-1503-250 Spiral End Mill Bit (1/4" Shank) $19.95

W92-1514-550 1/2" Dovetail Bit (1/4" Shank) $15.95

PICTURE FRAMES

To make the Picture Frames on page 17, the only hardware you'll need are turnbuttons and a sawtooth hanger (if you plan to hang the frame). These supplies are commonly available at hardware stores as well as art supply stores and framing shops.

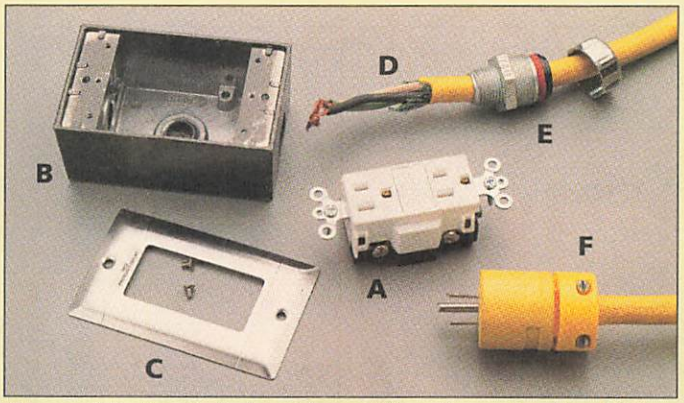

A ground-fault protected cord (page 29) can be made with a GFCI receptacle (A), a box (B), cover plate (C), cable (D), cable connector (E), and a plug (F). They're available at home centers and electrical supply stores.

PRECUT MATS. Each frame is designed to hold a standard, precut mat (available at art supply stores or framing shops). For the Grid Work Frame, use an 11x14 mat. For the Accent Frame, use an 8x10 mat. (They may need to be trimmed.)

STEP STOOL

There isn't any special hardware needed for the Step Stool, shown on page 24. Face grain hardwood plugs are available from the sources listed below.

PLUG CUTTERS. You can also cut your own face grain plugs with a tapered plug cutter, see sources below. By using a plug cutter and scrap from your project, the color and grain pattern of the plugs will match your project better when staining.

FINISHES

The Step Stool was stained with Minwax's Early American. Then I brushed on two coats of a clear satin polyurethane. Both these finishes are available at local retail stores and also through the sources listed below.

PICTURE FRAMES. Both of the picture frames were finished with two coats of a wiping varnish — General Finishes' Royal Finish. This is available from *Woodsmith Project Supplies.*

W92-4003-602 Royal Finish Top Coat (Satin) ... $11.95 quart

STAND-UP DESK. On the desk, I brushed on three coats of varnish and rubbed out the finish with sandpaper and steel wool.

However, I didn't use three coats of the same type of varnish. I used both high gloss and eggshell, see sources below. There's a good reason for this.

The eggshell varnish has solids that have been added to it. These solids diffuse light so the surface doesn't look so glossy.

So why not apply three coats of eggshell? There are a couple reasons. Because the gloss varnish is purer, it cures harder. Also, with three coats of eggshell, the solids added to the varnish tend to make the finish look cloudy and hide the grain.

So instead, I applied two coats of gloss varnish first to give it a really hard surface. Then a third coat using the eggshell to remove some of the shine.

MOISTURE METER

On page 29, we talked about buying home-dried wood. Anytime you buy lumber, it's always good to know what the moisture level is. Moisture meters are available from the sources listed below.

Also, we would like to recommend a couple books from Taunton Press (see phone number below) about how wood is dried. They are *Understanding Wood*, by Bruce Hoadley, and *On Wood and How to Dry It* from the *Fine Woodworking On...* series.

WOODSMITH PROJECT SUPPLIES

ORDER BY MAIL

To order by mail, use the order form that comes with the current issue. The order form includes information on sales tax as well as shipping and handling charges.

If the mail order form is not available, please call our Toll Free number at the right for more information on specific charges and any applicable sales tax.

ORDER BY PHONE

For fastest service use our Toll Free order line. Open Monday through Friday, 7 AM to 7 PM Central Time.

Before calling, please have your VISA, MasterCard, or Discover Card ready.

1-800-444-7527

Note: Prices subject to change after June, 1994

MAIL ORDER SOURCES

Similar hardware and supplies may be found in the following catalogs. Please call each company for a catalog or information.

Craftsman Wood Service
800-543-9367
Dovetail Bit, Plugs & Plug Cutters, Minwax Finishes, Polyurethane

Garrett Wade
800-221-2942
Desk Hardware, Dovetail & Spiral Cutter Bits, Books, Moisture Meter

Taunton Press
800-888-8286
Books

Woodcraft
800-225-1153
Dovetail & Spiral Cutter Bits, Plugs & Plug Cutters, Moisture Meter

The Woodworkers' Store
612-428-3200
Desk Hardware, Plugs & Plug Cutters, Dovetail & Spiral Cutter Bits, Polyurethane, General Finishes, Moisture Meter

Woodworking Unlimited
800-543-7586
Desk Hardware, Dovetail & Spiral Cutter Bits, Plugs & Plug Cutters, Polyurethane

Woodworker's Supply
800-645-9292
Dovetail & Spiral Cutter Bits, Plugs & Plug Cutters, Moisture Meter, Varnishes, Polyurethane

Final Details

Stand-Up Desk

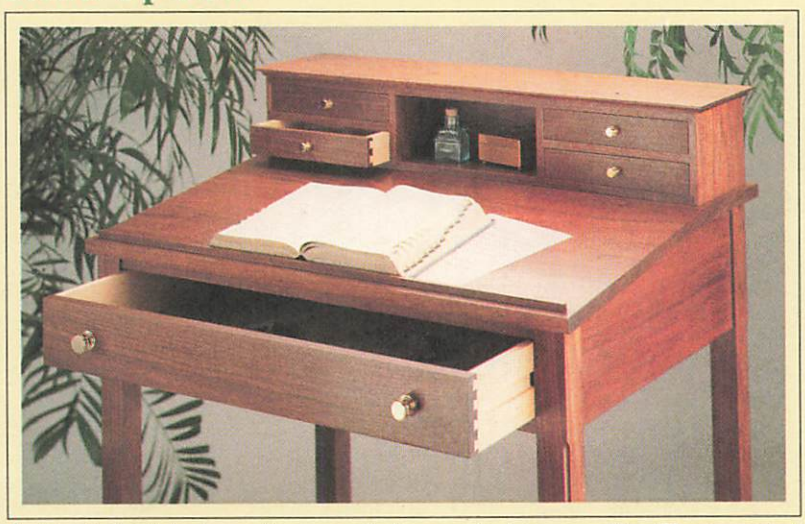

▲ *Dovetail joints, brass knobs, and shop-made drawer guides. These are just some of the interesting details that go into building this Desk. Complete step-by-step plans for building the project begin on page 6.*

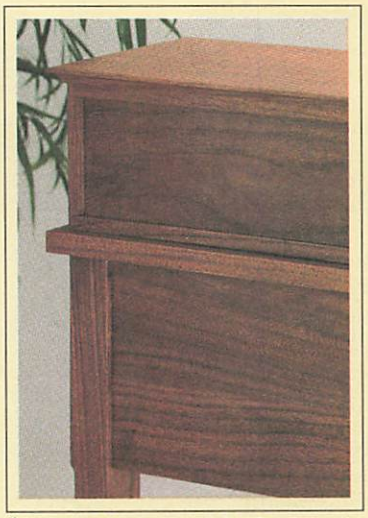

▲ *Even the back of the Desk is designed to look good. We used solid walnut to match the sides and front.*

Oak Step Stool

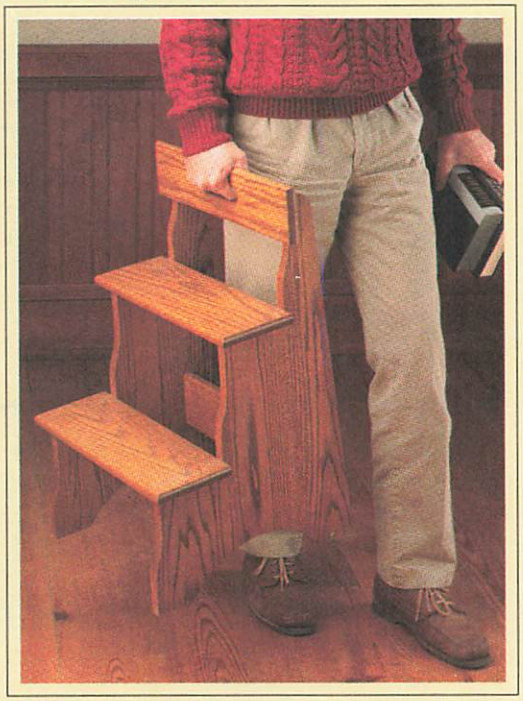

▲ *This Step Stool is strong enough to stand on, yet light enough to carry around. It's a great project for a free weekend. Plans start on page 24.*

Picture Frames

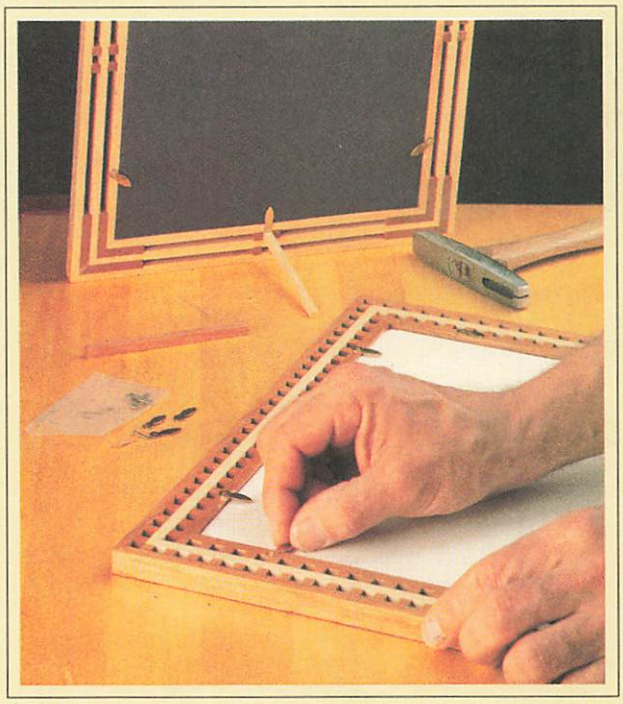

▲ *Beginning on page 17 we show how to make two unique picture frames. One with decorative grid work (foreground), and a smaller frame with accent strips (background).*